SG-LOK Tube Fittings

삼원그린 주식회사
경기도 시흥시 마유로 20 번길 101 (정왕동, 시화공단 3바 510)
Tel. 031-431-3452 / Fax. 031-431-3460

Features

SG-LOK tube fittings have been specifically designed for use on instrumentation, process and control systems and equipment employed in chemical, petroleum, power plant, ship building, semiconductor and solar industries.
SG-LOK tube fittings could also be used in applications of other fields where very high quality tube fittings are required.

Construction

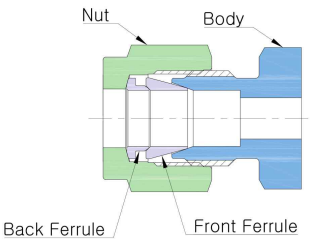

SG-LOK tube fittings are composed of body, nut, front ferrule and back ferrule.
When the nut is screwed forward, the back ferrule advances the front ferrule along the taper of the body, resulting in a tight grip on the tube and no leaks.

Materials

SG-LOK tube fittings are available in various kinds of materials as below. Straight fittings are machined from cold finished bar stock and shaped fittings from forgings.

Materials	Bar Stock	Forgings
316 SS or 316L SS	ASTM A479 ASME SA479	ASTM A182 ASME SA182
Brass	ASTM B16 ASTM B453	ASTM B283
Alloy 400 (Monel)	ASTM B164	ASTM B564 ASME SB564
Alloy 600 (Inconel)	ASTM B166	
Alloy 625 (Inconel)	ASTM B446	
Alloy 825 (Incoloy)	ASTM B425	
Alloy C-276 (Hastelloy C)	ASTM B574	ASTM B564
Duplex (SAF 2205) UNS S31803 / S32205	ASTM A479	ASTM A182
Super Duplex (SAF 2507®) UNS S32750	ASTM A479	
UNS 31254 (Incoloy 25-6MO)	ASTM B649	-

Thread Information

1. NPT Tapered Pipe Thread

NPT (National Pipe Thread) is based on ANSI B1.20.1.

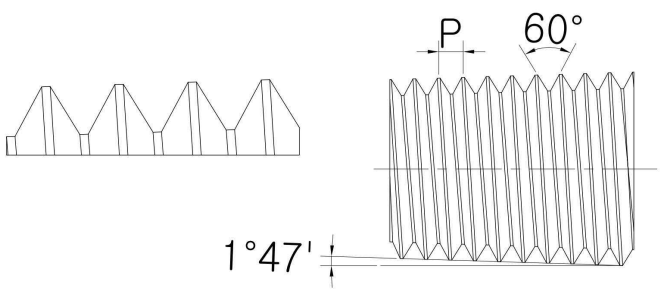

- Tapered thread (1° 47')
- Truncation of roots and crests are flat
- 60° thread angle
- Pitch is measured in threads per inch

2. ISO 7/1 Tapered Pipe Thread

International Organization for Standard (ISO 7/1) Tapered (PT)

Equivalent to BSPT (British Standard Pipe Taper Thread), DIN 2999, JIS B0203

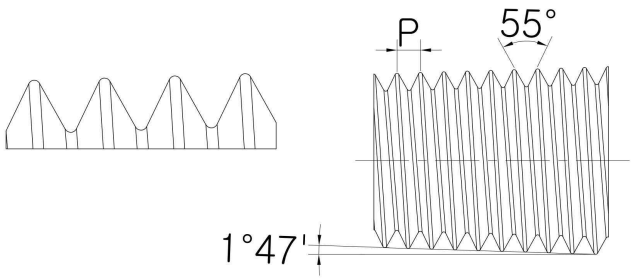

- Tapered thread (1° 47')
- Truncation of roots and crests are rounded
- 55° thread angle
- Pitch is measured in threads per inch

3. ISO 228/1 Parallel Pipe Thread

International Organization for Standard (ISO 228/1) Parallel(PF)

Equivalent to BSPP (British Standard Pipe Parallel Thread), DIN ISO228/1, JIS B0202

Gasket or O-ring is normally used to seal into the parallel female threaded components.

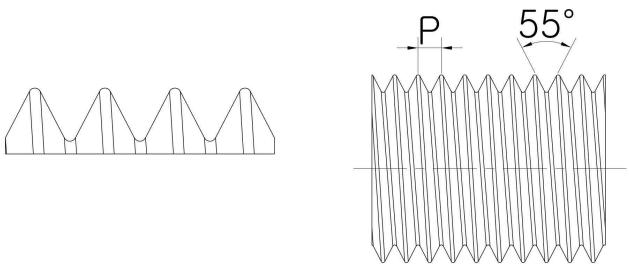

- Straight thread
- Truncation of roots and crests are rounded
- 55° flank angle
- Threads are measured in inches

Installation Instruction

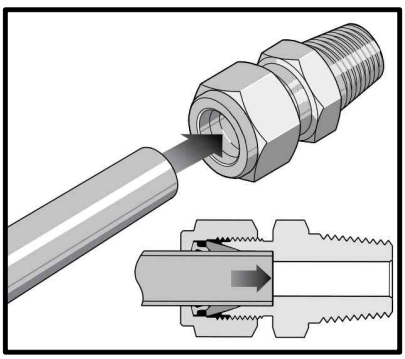

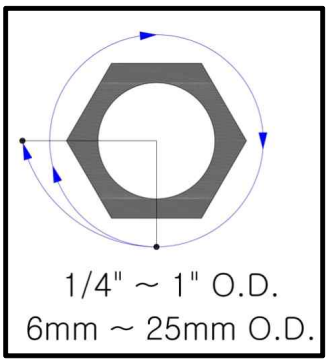

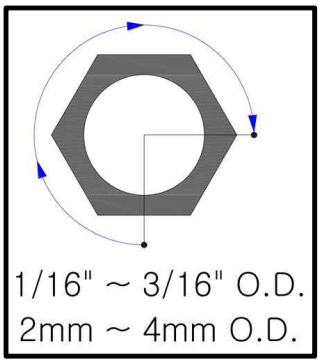

1. Fully insert the tube into the fitting and against the shoulder.
2. Rotate the nut finger-tight.
3. Mark the nut at the 6 o'clock position with pencil or scribe.
4. While holding the fitting body steady, tighten the nut 1-1/4 turns to the 9 o'clock position.
5. The above applies to all fittings from 1/4"to 1"(6mm to 25mm). Fittings from 1/16"to 3/16"(2mm to 4mm), only 3/4 turn is required.

Reassembly - Simply insert tube assembly into fitting body, tighten nut to the original position as indicated by the previous mark, then tighten slightly with a wrench.

Maximum Allowable Working Pressure

1. Stainless Steel Tubing

Fully annealed and seamless stainless steel tubing to comply with ASTM A269 or equivalent. Hardness should not exceed Rb 80.

Tubing should be free from scratched and suitable for bending and flaring.

Tube O.D. (inch)	Tube Wall Thickness (inch)										
	0.028	0.035	0.049	0.065	0.083	0.095	0.109	0.120	0.134	0.156	0.188
1/8	8550	10950									
3/16	5500	7100	10300								
1/4	4100	5200	7600	10300				Working pressure in psig			
5/16		4100	5900	8100							
3/8		3350	4850	6550							
1/2		2650	3750	5150	6750						
5/8			2950	4050	5250	6050					
3/4			2450	3350	4250	4950	5850				
4/8			2050	2850	3650	4250	4850				
1				2400	3100	3600	4200	4700			
1-1/4					2400	2800	3300	3600	4100	4900	
1-1/2						2300	2700	3000	3400	4000	4900
2							2000	2200	2500	2900	3600

For gas service application, use only tubing with wall thickness on outside of gray areas.
Allowable stress of 20000 psig between -29°C(-20°F) and 37°C(100°F) based on ultimate tensile strength to be 74000 psig.

2. Copper Tubing

Fully annealed and seamless copper tubing to comply with ASTM B75 or equivalent.

Hardness should not exceed Rb 60.

Tube O.D. (inch)	Tube Wall Thickness (inch)							
	0.028	0.035	0.049	0.065	0.083	0.095	0.109	0.120
1/4	1300	1600	2500	3500				
3/8		1000	1600	2200		Working pressure in psig		
1/2		800	1100	1600	2200			
5/8			900	1200	1600	1900		
3/4			700	1000	1300	1500	1800	
1			500	700	900	1100	1300	1500

For gas service application, use only tubing with wall thickness on outside of gray areas.
Allowable stress of 6000 psig between -29℃(-20℉) and 37℃ (100℉) bbased on ultimate tensile strength to be 30000 psig.

3. Monel Tubing

Fully annealed and seamless stainless steel tubing to comply with ASTM B165 or equivalent. Hardness should not exceed Rockwell Rb 75.

Tube O.D. (inch)	Tube Wall Thickness (inch)						
	0.035	0.049	0.065	0.083	0.095	0.109	0.120
1/4	4800	7000	9500				
3/8	3100	4400	6100		Working pressure in psig		
1/2	2300	3200	4400				
3/4		2200	3000	4000	4600		
1			2200	2900	3400	3900	4300

For gas service application, use only tubing with wall thickness on outside of gray areas.
Allowable stress of 6000 psig between -29℃(-20℉) and 37℃ (100℉) based on ultimate tensile strength to be 30000 psig.

How To order

1. Fractional(Inch) Tube fittings

SG-LOK fractional(inch) size tube fittings are ordered by part number as shown below.

G	MC	04	-	08	N	-	SS
SG-LOK Tube Fitting	Fitting Type	Tube O.D.		Pipe Size	Thread Type		Material

Fractional(inch) Tube Designation

Tube O.D.																
	inch	1/16	1/8	3/16	1/4	5/16	3/8	1/2	5/8	3/4	7/8	1	1-1/8	1-1/4	1-1/2	2
	mm	1.50	3.17	4.76	6.35	7.93	9.52	12.70	15.88	19.05	22.22	25.40	28.57	31.75	38.10	50.80
Designator		01	02	03	04	05	06	08	10	12	14	16	18	20	24	32

Pipe Size Designation

Pipe Size	1/8	1/4	3/8	1/2	3/4	1	1-1/4	1-1/2	2
Designator	02	04	06	08	12	16	20	24	32

Thread Type Designation

Designator	Thread Type	
N	NPT	National Standard Pipe Thread
R	ISO 7/1	Taper Pipe Thread
G	ISO 228/1	Parallel Pipe Thread

Material Designation

Designator	Materials
SS	316SS
BS	Brass
CS	Carbon Steel
MO	Alloy 400
IN60	Alloy 600

2. Metric Tube fittings

SG-LOK metric size tube fittings are ordered by part number as shown below.

G	MC	4M	-	08	N	-	SS
SG-LOK Tube Fitting	Fitting Type	Tube O.D.		Pipe Size	Thread Type		Material

Metric Tube O.D Designation

Tube O.D.	mm	2	3	4	6	8	10	12	14	15	16	18	20	22	25	28	32	38
Designator		02M	03M	04M	06M	08M	10M	12M	14M	15M	16M	18M	20M	22M	25M	28M	32M	38M

= INDEX =

[Tube to Female Pipe]

GMC	Male Connector	7, 8
GTMC	Male Thermocouple Male Connector	9
GMC-G	Male Connector for Bonded Seal	9, 10
GBMC	Bulkhead Male Connector	11
GMC-M	Male Connector for Metal Gasket	12
GME	Male Elbow	13, 14
GME45D	45˚ Male Elbow	15
GMRT	Male Run Tee	16
GMBT	Male Branch Tee	17

[Tube to Male Pipe]

GFC	Female Connector	18, 19
GGC	Gauge Connector	20
GBFC	Bulkhead Female Connector	21
GFE	Female Elbow	22
GFRT	Female Run Tee	23
GFBT	Female Branch Tee	24

[Tube to Tube Union]

GU	Union	25
GUO	Orifice Union	26
GRU	Reducing Union	27, 28
GBU	Bulkhead Union	29
GUE	Union Elbow	30
GUT	Union Tee	31
GRBT	Reducing Union Branch Tee	32
GRRT	Reducing Union Run Tee	32
GUC	Union Cross	33

[Stub Tube Connector]

GR	Reducer	34, 35
GBR	Bulkhead Reducer	36
GER	Elbow Reducer	36
GMA	Male Adapter	37
GFA	Female Adapter	38
GPC	Port Connector	39
GRPC	Reducing Port Connector	40

[Tube To AN Tube]

GAU	AN Union	41
GABU	AN Bulkhead Union	41
GAA	AN Adapter	41

[Tube To SAE O-Ring Seal]

GSMC	SAE Male Connector	42
GSME	Positionable SAE Male Elbow	42
GSME45D	Positionable 45˚ SAE Male Elbow	43
GSMRT	Positionable SAE Run Tee	43
GSMBT	Positionable SAE Male Branch Tee	43
GMOS	Male O-Seal Straight Thread Connector	44
GMOP	Male O-Seal Pipe Thread Connector	44

[Tube To Weld Systems]

GMPWC	Male Pipe Weld Connector	45
GMPWE	Male Pipe Weld Elbow	46
GTSWC	Tube Socket Weld Connector	46
GTSWE	Tube Socket Weld Elbow	46
GMPWA	Male Pipe Weld Adapter	47
GTSWA	Tube Socket Weld Adapter	47

[Plug and Cap]

GP	Tube Plug	48
GC	Tube Cap	48

[Components]

GI	Tube Insert	49
GN	Nut	49
GFF	Front Ferrule	50
GBF	Back Ferrule	50

Ordering Information & Dimension

[Tube to Female Pipe]

GMC

Male Connector

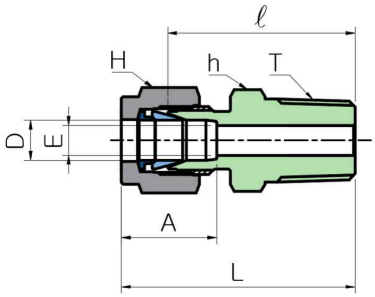

Connects Fractional(Inch) Tube to Female NPT Thread

Part No.	Tube O.D. D		T (NPT)	Dimensions (mm)							
				E Min.	h		H		A	ℓ	L
	inch	mm			inch	mm	inch	mm			
GMC 01-01N	1/16	1.58	1/16	1.3	5/16	7.93	5/16	7.93	8.6	20.0	23.8
GMC 01-02N	1/16	1.58	1/8	1.3	7/16	11.11	5/16	7.93	8.6	22.4	26.2
GMC 01-04N	1/16	1.58	1/4	1.3	9/16	14.28	5/16	7.93	8.6	27.2	31.0
GMC 02-01N	1/8	3.17	1/16	2.3	7/16	11.10	7/16	11.10	12.7	23.1	29.7
GMC 02-02N	1/8	3.17	1/8	2.3	7/16	11.10	7/16	11.10	12.7	23.9	30.5
GMC 02-04N	1/8	3.17	1/4	2.3	9/16	14.28	7/16	11.10	12.7	29.0	35.6
GMC 02-06N	1/8	3.17	3/8	2.3	11/16	17.46	7/16	11.10	12.7	29.2	35.8
GMC 02-08N	1/8	3.17	1/2	2.3	7/8	22.22	7/16	11.10	12.7	35.6	42.2
GMC 03-02N	3/16	4.76	1/8	3.0	7/16	11.11	1/2	12.70	13.7	24.6	31.2
GMC 03-04N	3/16	4.76	1/4	3.0	9/16	14.28	1/2	12.70	13.7	29.7	36.3
GMC 04-01N	1/4	6.35	1/16	3.0	1/2	12.70	9/16	14.28	15.2	25.4	32.8
GMC 04-02N	1/4	6.35	1/8	4.8	1/2	12.70	9/16	14.28	15.2	25.4	32.8
GMC 04-04N	1/4	6.35	1/4	4.8	9/16	14.28	9/16	14.28	15.2	30.5	37.8
GMC 04-06N	1/4	6.35	3/8	4.8	11/16	17.46	9/16	14.28	15.2	31.0	38.4
GMC 04-08N	1/4	6.35	1/2	4.8	7/8	22.22	9/16	14.28	15.2	37.3	44.7
GMC 04-12N	1/4	6.35	3/4	4.8	1-1/16	26.98	9/16	14.28	15.2	38.9	46.2
GMC 05-02N	5/16	7.93	1/8	4.8	9/16	14.28	5/8	15.87	16.3	26.7	34.0
GMC 05-04N	5/16	7.93	1/4	6.4	9/16	14.28	5/8	15.87	16.3	31.2	38.6
GMC 05-06N	5/16	7.93	3/8	6.4	11/16	17.46	5/8	15.87	16.3	31.8	39.1
GMC 06-02N	3/8	9.52	1/8	4.8	5/8	15.87	11/16	17.46	16.8	27.9	35.3
GMC 06-04N	3/8	9.52	1/4	7.1	5/8	15.87	11/16	17.46	16.8	32.5	39.9
GMC 06-06N	3/8	9.52	3/8	7.1	11/16	17.46	11/16	17.46	16.8	32.5	39.9
GMC 06-08N	3/8	9.52	1/2	7.1	7/8	22.22	11/16	17.46	16.8	38.9	46.2
GMC 06-12N	3/8	9.52	3/4	7.1	1-1/16	26.98	11/16	17.46	16.8	40.4	47.8
GMC 06-16N	3/8	9.52	1	7.1	1-3/8	34.92	11/16	17.46	16.8	47.0	54.4
GMC 08-02N	1/2	12.70	1/8	4.8	13/16	20.63	7/8	22.22	22.9	28.7	38.9
GMC 08-04N	1/2	12.70	1/4	7.1	13/16	20.63	7/8	22.22	22.9	33.3	43.4
GMC 08-06N	1/2	12.70	3/8	9.7	13/16	20.63	7/8	22.22	22.9	33.3	43.4
GMC 08-08N	1/2	12.70	1/2	10.4	7/8	22.22	7/8	22.22	22.9	38.9	49.0
GMC 08-12N	1/2	12.70	3/4	10.4	1-1/16	26.98	7/8	22.22	22.9	40.4	50.5
GMC 08-16N	1/2	12.70	1	10.4	1-3/8	34.92	7/8	22.22	22.9	47.0	57.2
GMC 10-06N	5/8	15.87	3/8	9.7	15/16	23.81	1	25.40	24.4	34.0	44.2
GMC 10-08N	5/8	15.87	1/2	11.9	15/16	23.81	1	25.40	24.4	38.9	49.0
GMC 10-12N	5/8	15.87	3/4	12.7	1-1/16	26.98	1	25.40	24.4	40.4	50.5
GMC 12-06N	3/4	19.05	3/8	10.4	1-1/16	26.98	1-1/8	28.57	24.4	35.4	45.6
GMC 12-08N	3/4	19.05	1/2	11.9	1-1/16	26.98	1-1/8	28.57	24.4	40.4	50.5
GMC 12-12N	3/4	19.05	3/4	15.7	1-1/16	26.98	1-1/8	28.57	24.4	40.4	50.5
GMC 12-16N	3/4	19.05	1	15.7	1-3/8	34.92	1-1/8	28.57	24.4	47.0	57.2
GMC 14-12N	7/8	22.22	3/4	15.7	1-3/16	30.16	1-1/4	31.75	25.9	40.4	50.5
GMC 14-16N	7/8	22.22	1	18.3	1-3/8	34.92	1-1/4	31.75	25.9	47.0	57.2
GMC 16-08N	1	25.40	1/2	11.9	1-3/8	34.92	1-1/2	38.10	31.2	45.2	57.4
GMC 16-12N	1	25.40	3/4	15.7	1-3/8	34.92	1-1/2	38.10	31.2	45.2	57.4
GMC 16-16N	1	25.40	1	22.4	1-3/8	34.92	1-1/2	38.10	31.2	50.0	62.2
GMC 20-16N	1-1/4	31.75	1	22.4	1-3/4	44.45	1-7/8	47.63	41.1	55.1	77.2
GMC 20-20N	1-1/4	31.75	1-1/4	27.7	1-3/4	44.45	1-7/8	47.63	41.1	55.1	77.2
GMC 24-24N	1-1/2	38.10	1-1/2	34.0	2-1/8	53.97	2-1/4	57.15	50.0	61.7	88.9
GMC 32-32N	2	50.80	2	46.0	2-3/4	69.85	3	76.20	67.6	76.2	113.5

ISO Tapered threads are available for all fractional GMC. To order, add “R” as a suffix instead of “N”.

[Tube to Female Pipe]

GMC
Male Connector

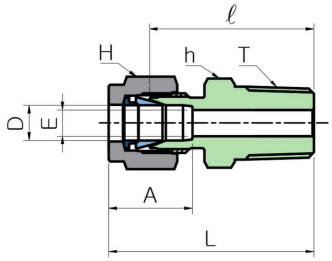

Connects Metric Tube to Female ISO Tapered Thread

Part No.	Tube O.D. D mm	T (PT)	Dimensions (mm)					
			E Min.	h	H	A	ℓ	L
GMC 02M-02R	2	1/8	1.7	11.11	11.11	12.9	23.9	30.5
GMC 03M-02R	3	1/8	2.4	11.11	11.11	12.9	23.9	30.5
GMC 03M-04R	3	1/4	2.4	14.28	11.11	12.9	29.0	35.6
GMC 04M-02R	4	1/8	2.4	11.11	12.70	13.7	24.6	31.2
GMC 04M-04R	4	1/4	2.4	14.28	12.70	13.7	29.7	36.3
GMC 06M-02R	6	1/8	4.8	12.70	14.28	15.3	25.4	32.8
GMC 06M-04R	6	1/4	4.8	14.28	14.28	15.3	30.5	37.9
GMC 06M-06R	6	3/8	4.8	17.46	14.28	15.3	31.0	38.4
GMC 06M-08R	6	1/2	4.8	22.22	14.28	15.3	37.3	44.7
GMC 08M-02R	8	1/8	4.8	14.28	15.87	16.2	26.7	34.2
GMC 08M-04R	8	1/4	6.4	14.28	15.87	16.2	31.2	38.7
GMC 08M-06R	8	3/8	6.4	17.46	15.87	16.2	31.8	39.3
GMC 08M-08R	8	1/2	6.4	22.22	15.87	16.2	38.1	45.6
GMC 10M-02R	10	1/8	4.8	17.46	19.05	17.2	28.7	36.3
GMC 10M-04R	10	1/4	7.1	17.46	19.05	17.2	33.3	40.9
GMC 10M-06R	10	3/8	7.9	17.46	19.05	17.2	33.3	40.9
GMC 10M-08R	10	1/2	7.9	22.22	19.05	17.2	38.9	46.5
GMC 12M-02R	12	1/8	4.8	20.63	22.22	22.8	28.7	38.8
GMC 12M-04R	12	1/4	7.1	20.63	22.22	22.8	33.3	43.4
GMC 12M-06R	12	3/8	9.5	20.63	22.22	22.8	33.3	43.4
GMC 12M-08R	12	1/2	9.5	22.22	22.22	22.8	38.9	49.0
GMC 12M-12R	12	3/4	9.5	26.98	22.22	22.8	40.4	50.5
GMC 14M-04R	14	1/4	7.1	22.22	25.40	24.4	34.0	44.1
GMC 14M-06R	14	3/8	9.5	22.22	25.40	24.4	34.0	44.1
GMC 14M-08R	14	1/2	11.1	23.81	25.40	24.4	38.9	49.0
GMC 15M-08R	15	1/2	11.9	23.81	25.40	24.4	38.9	49.0
GMC 16M-06R	16	3/8	9.5	23.81	25.40	24.4	34.0	44.1
GMC 16M-08R	16	1/2	11.9	23.81	25.40	24.4	38.9	49.0
GMC 16M-12R	16	3/4	12.7	26.98	25.40	24.4	40.4	50.5
GMC 18M-08R	18	1/2	11.9	26.98	30.16	24.4	40.4	50.5
GMC 18M-12R	18	3/4	15.1	26.98	30.16	24.4	40.4	50.5
GMC 20M-08R	20	1/2	11.9	30.16	31.75	26.0	42.2	52.3
GMC 20M-12R	20	3/4	15.9	30.16	31.75	26.0	42.2	52.3
GMC 22M-08R	22	1/2	11.9	30.16	31.75	26.0	42.2	52.3
GMC 22M-12R	22	3/4	15.9	30.16	31.75	26.0	42.2	52.3
GMC 25M-08R	25	1/2	11.9	34.92	38.10	31.3	45.2	57.5
GMC 25M-12R	25	3/4	15.9	34.92	38.10	31.3	45.2	57.5
GMC 25M-16R	25	1	21.8	34.92	38.10	31.3	50.0	62.3
GMC 28M-16R	28	1	21.8	44.45	47.63	36.6	51.6	72.4
GMC 28M-20R	28	1-1/4	21.8	47.63	47.63	36.6	52.3	73.1
GMC 30M-20R	30	1-1/4	26.2	47.63	50.80	39.6	55.6	77.2
GMC 32M-20R	32	1-1/4	28.6	47.63	50.80	42.0	56.6	79.6
GMC 38M-24R	38	1-1/2	33.7	55.56	57.15	49.4	64.0	92.6

NPT threads are available for all metric GMC. To order, add “N” as a suffix instead of “R”.

[Tube to Female Pipe]

GTMC

Male Thermocouple Male Connector

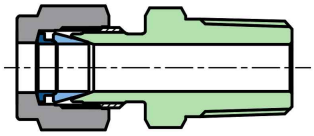

SG-LOK Bored-through Male Connectors accommodate thermocouples or dip tubes.
Most SG-LOK Male Connectors can be bored-through fittings.
Male connectors which tube fitting end is larger than pipe thread end such as GTMC 10M-06R(N), GTMC 08-04R(N) are impractical to make bored-through fittings.

GMC-G

Male Connector for Bonded Seal

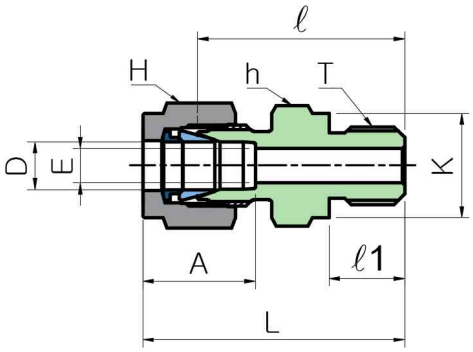

Connects Fractional(Inch) Tube to Female ISO Parallel Thread

Part No.	Tube O.D. D		T (PF)	Dimensions (mm)									
				E Min.	h		H		A	ℓ	ℓ1	L	K
	inch	mm			inch	mm	inch	mm					
GMC 02-02G	1/8	3.17	1/8	2.3	9/16	14.28	7/16	11.11	12.7	23.4	7.1	30.0	13.8
GMC 02-04G	1/8	3.17	1/4	2.3	3/4	19.05	7/16	11.11	12.7	28.7	11.2	35.3	18.0
GMC 02-06G	1/8	3.17	3/8	2.3	7/8	22.22	7/16	11.11	12.7	29.7	11.2	36.3	21.8
GMC 04-02G	1/4	6.35	1/8	4.1	9/16	14.28	9/16	14.28	15.2	24.9	7.1	32.3	13.8
GMC 04-04G	1/4	6.35	1/4	4.8	3/4	19.05	9/16	14.28	15.2	30.2	11.2	37.6	18.0
GMC 04-06G	1/4	6.35	3/8	4.8	7/8	22.22	9/16	14.28	15.2	31.5	11.2	38.9	21.8
GMC 04-08G	1/4	6.35	1/2	4.8	1-1/16	26.98	9/16	14.28	15.2	37.3	14.2	44.7	26.0
GMC 06-04G	3/8	9.52	1/4	5.8	3/4	19.05	11/16	17.46	16.8	31.8	11.2	39.1	18.0
GMC 06-06G	3/8	9.52	3/8	7.1	7/8	22.22	11/16	17.46	16.8	33.0	11.2	40.4	21.8
GMC 06-08G	3/8	9.52	1/2	7.1	1-1/16	26.98	11/16	17.46	16.8	38.9	14.2	46.2	26.0
GMC 08-02G	1/2	12.70	1/8	4.8	7/8	22.22	7/8	22.22	22.9	28.5	7.1	38.7	13.8
GMC 08-04G	1/2	12.70	1/4	5.8	13/16	20.63	7/8	22.22	22.9	32.5	11.2	42.7	18.0
GMC 08-06G	1/2	12.70	3/8	7.9	7/8	22.22	7/8	22.22	22.9	33.0	11.2	43.2	21.8
GMC 08-08G	1/2	12.70	1/2	10.4	1-1/16	26.98	7/8	22.22	22.9	38.9	14.2	49.0	26.0
GMC 12-08G	3/4	19.05	1/2	11.9	1-1/16	26.98	1-1/8	28.57	24.4	38.9	14.2	49.0	26.0
GMC 12-12G	3/4	19.05	3/4	15.7	1-3/8	34.92	1-1/8	28.57	24.4	42.7	15.7	52.8	32.0
GMC 16-12G	1	25.40	3/4	16.0	1-3/8	34.92	1-1/2	38.10	31.2	45.2	15.7	57.4	32.0
GMC 16-16G	1	25.40	1	19.8	1-5/8	41.27	1-1/2	38.10	31.2	47.8	18.3	59.9	39.0

[Tube to Female Pipe]

GMC-G

Male Connector for Bonded Seal

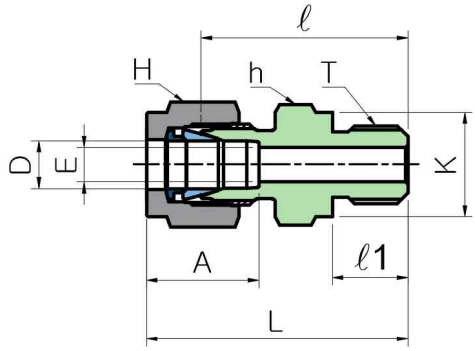

Connects Metric Tube to Female ISO Parallel Thread

Part No.	Tube O.D. D	T (PF)	Dimensions (mm)							
	mm		E Min.	h	H	A	ℓ	ℓ1	L	K
GMC 02M-02G	2	1/8	1.7	14.28	12.70	12.9	23.4	7.1	30.0	13.8
GMC 03M-02G	3	1/8	2.4	14.28	11.11	12.9	23.4	7.1	30.0	13.8
GMC 03M-04G	3	1/4	2.4	19.05	11.11	12.9	28.7	11.2	35.3	18.0
GMC 04M-02G	4	1/8	2.4	14.28	12.70	13.7	24.1	7.1	30.7	13.8
GMC 04M-04G	4	1/4	2.4	19.05	12.70	13.7	29.4	11.2	36.0	18.0
GMC 06M-02G	6	1/8	4.0	14.28	14.28	15.3	24.9	7.1	32.3	13.8
GMC 06M-04G	6	1/4	4.8	19.05	14.28	15.3	30.2	11.2	37.6	18.0
GMC 06M-06G	6	3/8	4.8	22.22	14.28	15.3	31.5	11.2	38.9	21.8
GMC 06M-08G	6	1/2	4.8	26.98	14.28	15.3	37.3	14.2	44.7	26.0
GMC 08M-02G	8	1/8	4.0	15.87	15.87	16.2	25.7	7.1	33.2	13.8
GMC 08M-04G	8	1/4	6.4	19.05	15.87	16.2	31.0	11.2	38.5	18.0
GMC 08M-06G	8	3/8	6.4	22.22	15.87	16.2	32.3	11.2	39.8	21.8
GMC 08M-08G	8	1/2	6.4	26.98	15.87	16.2	38.1	14.2	45.6	26.0
GMC 10M-04G	10	1/4	5.9	19.05	19.05	17.2	31.8	11.2	39.4	18.0
GMC 10M-06G	10	3/8	7.9	22.22	19.05	17.2	33.0	11.2	40.6	21.8
GMC 10M-08G	10	1/2	7.9	26.98	19.05	17.2	38.9	14.2	46.5	26.0
GMC 12M-04G	12	1/4	5.9	22.22	22.22	22.8	32.5	11.2	42.6	18.0
GMC 12M-06G	12	3/8	7.9	22.22	22.22	22.8	33.0	11.2	43.1	21.8
GMC 12M-08G	12	1/2	9.5	26.98	22.22	22.8	38.9	14.2	49.0	26.0
GMC 12M-12G	12	3/4	9.5	34.92	22.22	22.8	42.7	15.7	52.8	32.0
GMC 15M-08G	15	1/2	11.9	26.98	25.40	24.4	38.9	14.2	49.0	26.0
GMC 16M-06G	16	3/8	7.9	23.81	25.40	24.4	33.8	11.2	43.9	21.8
GMC 16M-08G	16	1/2	11.9	26.98	25.40	24.4	38.9	14.2	49.0	26.0
GMC 18M-08G	18	1/2	11.9	26.98	30.16	24.4	38.9	14.2	49.0	26.0
GMC 18M-12G	18	3/4	15.1	34.92	30.16	24.4	42.7	15.7	52.8	32.0
GMC 20M-08G	20	1/2	11.9	30.16	31.75	26.0	40.4	14.2	50.5	26.0
GMC 20M-12G	20	3/4	15.9	34.92	31.75	26.0	42.7	15.7	52.8	32.0
GMC 22M-08G	22	1/2	11.9	30.16	31.75	26.0	40.4	14.2	50.5	26.0
GMC 22M-12G	22	3/4	15.1	34.92	31.75	26.0	42.7	15.7	52.8	32.0
GMC 25M-12G	25	3/4	15.9	34.92	38.10	31.3	45.2	15.7	57.5	32.0
GMC 25M-16G	25	1	19.8	41.27	38.10	31.3	47.8	18.3	60.1	39.0
GMC 28M-16G	28	1	19.8	44.45	47.63	36.6	49.3	18.3	70.1	39.0
GMC 28M-20G	28	1-1/4	21.8	50.80	47.63	36.6	53.1	19.8	73.9	49.0
GMC 32M-20G	32	1-1/4	28.6	50.80	50.80	42.0	55.9	19.8	78.9	49.0
GMC 38M-24G	38	1-1/2	31.8	55.56	57.15	49.4	63.2	22.1	90.8	54.7

[Tube to Female Pipe]

GBMC

Bulkhead Male Connector

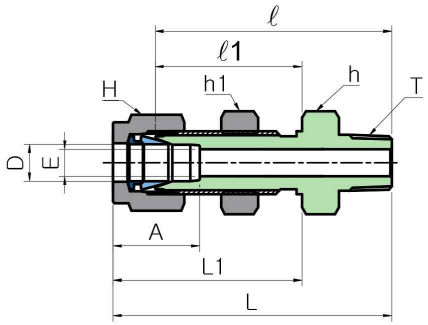

Connects Fractional(Inch) Tube to Female NPT Thread

Part No.	Tube O.D. D		T (NPT)	Dimensions (mm)														
				E Min.	h		h1		H		A	ℓ	ℓ1	L	L1	Panel Hole Size	Max Panel Thickness
	inch	mm			inch	mm	inch	mm	inch	mm							
GBMC 02-02N	1/8	3.17	1/8	2.3	1/2	12.7	1/2	12.7	7/16	11.11	12.7	39.9	24.6	46.5	31.2	8.3	12.7
GBMC 04-02N	1/4	6.35	1/8	4.8	5/8	15.87	5/8	15.87	9/16	14.28	15.2	42.2	26.2	49.5	33.5	11.5	10.2
GBMC 04-04N	1/4	6.35	1/4	4.8	5/8	15.87	5/8	15.87	9/16	14.28	15.2	46	26.2	53.3	33.5	11.5	10.2
GBMC 06-04N	3/8	9.52	1/4	7.1	3/4	19.05	3/4	19.05	11/16	17.46	16.8	50	29.5	57.4	36.8	14.7	11.2
GBMC 06-06N	3/8	9.52	3/8	7.1	3/4	19.05	3/4	19.05	11/16	17.46	16.8	50	29.5	57.4	36.8	14.7	11.2
GBMC 06-08N	3/8	9.52	1/2	7.1	7/8	22.22	3/4	19.05	11/16	17.46	16.8	56.4	29.5	63.8	36.8	14.7	11.2
GBMC 08-06N	1/2	12.7	3/8	9.7	15/16	23.81	15/16	23.81	7/8	22.22	22.9	53.1	31.8	63.2	41.9	19.5	12.7
GBMC 08-08N	1/2	12.7	1/2	10.4	15/16	23.81	15/16	23.81	7/8	22.22	22.9	58.7	31.8	68.8	41.9	19.5	12.7
GBMC 12-12N	3/4	19.05	3/4	15.7	1-3/16	30.16	1-3/16	30.16	1-1/8	28.57	24.4	66	37.3	76.2	47.5	25.8	16.8
GBMC 16-16N	1	25.4	1	22.4	1-5/8	41.27	1-5/8	41.27	1-1/2	38.1	31.2	81	45.2	93.2	57.4	33.7	19.1

ISO Tapered threads are available for all fractional GBMC. To order, add “R” as a suffix instead of “N”.

Connects Metric Tube to Female ISO Tapered Thread

Part No.	Tube O.D. D	T (PT)	Dimensions (mm)										
			E Min.	h	h1	H	A	ℓ	ℓ1	L	L1	Panel Hole Size	Max Panel Thickness
	mm												
GBMC 03M-02R	3	1/8	2.4	14.28	14.28	11.11	12.9	39.8	24.6	46.5	31.2	8.3	12.7
GBMC 06M-02R	6	1/8	4.8	15.87	15.87	14.28	15.3	42.2	26.2	49.6	33.6	11.5	10.2
GBMC 06M-04R	6	1/4	4.8	15.87	15.87	14.28	15.3	46.2	26.2	53.6	33.6	11.5	10.2
GBMC 08M-04R	8	1/4	6.4	17.46	17.46	15.87	16.2	49	28.6	56.5	36.1	13.1	11.2
GBMC 10M-04R	10	1/4	7.1	22.22	22.22	19.05	17.2	52	29.5	59.7	37	16.2	11.2
GBMC 12M-06R	12	3/8	9.5	23.81	23.81	22.22	22.8	53.1	31.8	63.2	41.9	19.5	12.7
GBMC 12M-08R	12	1/2	9.5	23.81	23.81	22.22	22.8	58.7	31.8	68.8	41.9	19.5	12.7

NPT threads are available for all metric GBMC. To order, add “N” as a suffix instead of “R”.

[Tube to Female Pipe]

GMC-M

Male Connector for Metal Gasket

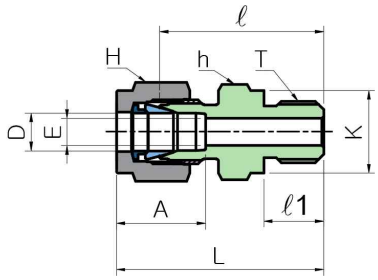

Connects Fractional(Inch) Tube to Female ISO Parallel Thread

Part No.	Tube O.D. D		T (PF)	Dimensions (mm)									
				E	h		H		A	ℓ	ℓ1	L	K
	inch	mm		Min.	inch	mm	inch	mm					
GMC 02-02M	1/8	3.17	1/8	2.3	9/16	14.28	7/16	11.11	12.7	23.4	7.1	30.0	13.8
GMC 02-04M	1/8	3.17	1/4	2.3	3/4	19.05	7/16	11.11	12.7	28.7	11.2	35.3	18.0
GMC 02-06M	1/8	3.17	3/8	2.3	7/8	22.22	7/16	11.11	12.7	29.7	11.2	36.2	21.8
GMC 04-02M	1/4	6.35	1/8	4.1	9/16	14.28	9/16	14.28	15.2	24.9	7.1	32.3	13.8
GMC 04-04M	1/4	6.35	1/4	4.8	3/4	19.05	9/16	14.28	15.2	30.2	11.2	37.6	18.0
GMC 04-06M	1/4	6.35	3/8	4.8	7/8	22.22	9/16	14.28	15.2	31.5	11.2	38.9	21.8
GMC 04-08M	1/4	6.35	1/2	4.8	1-1/16	26.98	9/16	14.28	15.2	37.3	14.2	44.7	26.0
GMC 06-04M	3/8	9.52	1/4	5.8	3/4	19.05	11/16	17.46	16.8	31.8	11.2	39.1	18.0
GMC 06-06M	3/8	9.52	3/8	7.1	7/8	22.22	11/16	17.46	16.8	33.0	11.2	40.4	21.8
GMC 06-08M	3/8	9.52	1/2	7.1	1-1/16	26.98	11/16	17.46	16.8	38.9	14.2	46.2	26.0
GMC 08-04M	1/2	12.70	1/4	5.8	13/16	20.63	7/8	22.22	22.9	32.5	11.2	42.7	18.0
GMC 08-06M	1/2	12.70	3/8	7.9	7/8	22.22	7/8	22.22	22.9	33.0	11.2	43.2	21.8
GMC 08-08M	1/2	12.70	1/2	10.4	1-1/16	26.98	7/8	22.22	22.9	38.9	14.2	49.0	26.0
GMC 12-08M	3/4	19.05	1/2	11.9	1-1/16	26.98	1-1/8	28.57	24.4	38.9	14.2	49.0	26.0
GMC 12-12M	3/4	19.05	3/4	15.7	1-5/16	31.75	1-1/8	28.57	24.4	42.7	15.7	52.8	32.0
GMC 16-12M	1	25.40	3/4	16.0	1-3/8	34.92	1-1/2	38.10	31.2	45.2	15.7	57.4	32.0
GMC 16-16M	1	25.40	1	19.8	1-5/8	41.27	1-1/2	38.10	31.2	47.8	18.3	59.9	39.0

Connects Metric Tube to Female ISO Parallel Thread

Part No.	Tube O.D. D	T (PF)	Dimensions (mm)							
	mm		E Min.	h	H	A	ℓ	ℓ1	L	K
GMC 03M-02M	3	1/8	2.4	14.28	11.11	12.7	23.4	7.1	30.0	13.8
GMC 03M-04M	3	1/4	2.4	19.05	11.11	12.7	28.7	11.2	35.3	18.0
GMC 04M-02M	4	1/8	2.4	14.28	12.70	13.7	24.1	7.1	30.7	13.8
GMC 04M-04M	4	1/4	2.4	19.05	12.70	13.7	29.4	11.2	36.0	18.0
GMC 06M-02M	6	1/8	4.0	14.28	14.28	15.3	24.9	7.1	32.3	13.8
GMC 06M-04M	6	1/4	4.8	19.05	14.28	15.3	30.2	11.2	37.6	18.0
GMC 06M-06M	6	3/8	4.8	22.22	14.28	15.3	31.5	11.2	38.9	21.8
GMC 06M-08M	6	1/2	4.8	26.98	14.28	15.3	37.3	14.2	44.7	26.0
GMC 08M-02M	8	1/8	4.0	15.87	15.87	16.3	25.7	7.1	33.2	13.8
GMC 08M-04M	8	1/4	6.4	19.05	15.87	16.3	31.0	11.2	38.5	18.0
GMC 08M-06M	8	3/8	6.4	22.22	15.87	16.3	32.3	11.2	39.8	21.8
GMC 08M-08M	8	1/2	6.4	26.98	15.87	16.3	38.1	14.2	45.6	26.0
GMC 10M-04M	10	1/4	5.9	19.05	19.05	17.3	31.8	11.2	39.4	18.0
GMC 10M-06M	10	3/8	7.9	22.22	19.05	17.3	33.0	11.2	40.6	21.8
GMC 10M-08M	10	1/2	7.9	26.98	19.05	17.3	38.9	14.2	46.5	26.0
GMC 12M-04M	12	1/4	5.9	22.22	22.22	22.8	32.5	11.2	42.6	18.0
GMC 12M-06M	12	3/8	7.9	22.22	22.22	22.8	33.0	11.2	43.1	21.8
GMC 12M-08M	12	1/2	9.5	26.98	22.22	22.8	38.9	14.2	49.0	26.0
GMC 12M-12M	12	3/4	9.5	34.92	22.22	22.8	42.7	15.7	52.8	32.0
GMC 15M-08M	15	1/2	11.9	26.98	25.40	24.4	38.9	14.2	49.0	26.0
GMC 16M-06M	16	3/8	7.9	23.81	25.40	24.5	33.8	11.2	43.9	21.8
GMC 16M-08M	16	1/2	11.9	26.98	25.40	24.5	38.9	14.2	49.0	26.0
GMC 18M-08M	18	1/2	11.9	26.98	30.16	24.5	38.9	14.2	49.0	26.0
GMC 18M-12M	18	3/4	15.1	34.92	30.16	24.5	42.7	15.7	52.8	32.0
GMC 20M-08M	20	1/2	11.9	30.16	31.75	26.2	40.4	14.2	50.5	26.0
GMC 20M-12M	20	3/4	15.9	34.92	31.75	26.2	42.7	15.7	52.8	32.0
GMC 22M-12M	22	3/4	15.9	34.92	31.75	26.2	42.7	15.7	52.8	32.0
GMC 25M-12M	25	3/4	15.9	34.92	38.10	31.1	45.2	15.7	57.5	32.0
GMC 25M-16M	25	1	19.8	41.27	38.10	31.1	47.8	18.3	60.1	39.0
GMC 28M-16M	28	1	19.8	41.27	47.63	41.1	49.3	18.3	70.1	39.0
GMC 28M-20M	28	1-1/4	21.8	50.80	47.63	41.1	53.1	19.8	73.9	49.0
GMC 32M-20M	32	1-1/4	28.6	50.80	50.80	40.9	55.9	19.8	78.9	49.0
GMC 38M-24M	38	1-1/2	31.8	55.56	57.15	49.9	61.7	20.6	89.3	54.7

[Tube to Female Pipe]

GME
Male Elbow

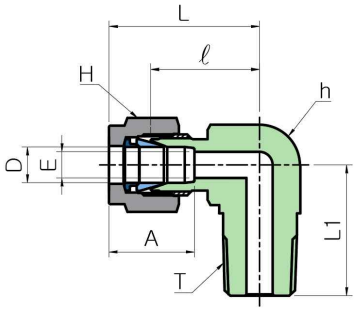

Connects Fractional(Inch) Tube to Female NPT Thread

Part No.	Tube O.D. D		T (NPT)	Dimensions (mm)								
				E Min.	h		H		A	ℓ	L	L1
	inch	mm			inch	mm	inch	mm				
GME 01-01N	1/16	1.68	1/16	1.3	1/2	12.70	5/16	7.93	8.6	15.2	19.1	17.8
GME 01-02N	1/16	1.68	1/8	1.3	1/2	12.70	5/16	7.93	8.6	15.2	19.1	17.8
GME 02-02N	1/8	3.17	1/8	2.3	1/2	12.70	7/16	11.11	12.7	17.0	23.6	17.8
GME 02-04N	1/8	3.17	1/4	2.3	1/2	12.70	7/16	11.11	12.7	18.0	24.6	23.4
GME 02-06N	1/8	3.17	3/8	2.3	11/16	17.46	7/16	11.11	12.7	22.2	28.8	26.1
GME 02-08N	1/8	3.17	1/2	2.3	13/16	20.63	7/16	11.11	12.7	22.9	29.5	33.0
GME 03-02N	3/16	4.76	1/8	3.0	1/2	12.70	1/2	12.70	13.7	18.8	25.4	18.8
GME 03-04N	3/16	4.76	1/4	3.0	1/2	12.70	1/2	12.70	13.7	18.8	25.4	23.4
GME 04-01N	1/4	6.35	1/16	3.0	1/2	12.70	9/16	14.28	15.2	19.6	26.9	18.8
GME 04-02N	1/4	6.35	1/8	4.8	1/2	12.70	9/16	14.28	15.2	19.6	26.9	18.8
GME 04-04N	1/4	6.35	1/4	4.8	1/2	12.70	9/16	14.28	15.2	19.6	26.9	23.4
GME 04-06N	1/4	6.35	3/8	4.8	11/16	17.46	9/16	14.28	15.2	22.4	29.7	26.2
GME 04-08N	1/4	6.35	1/2	4.8	13/16	20.63	9/16	14.28	15.2	24.4	31.7	33.0
GME 04-12N	1/4	6.35	3/4	4.8	1-1/16	26.98	9/16	14.28	15.2	28.3	35.6	36.8
GME 05-02N	5/16	7.93	1/8	4.8	9/16	14.28	5/8	15.87	16.3	21.3	28.7	19.8
GME 05-04N	5/16	7.93	1/4	6.4	9/16	14.28	5/8	15.87	16.3	21.3	28.7	24.4
GME 05-06N	5/16	7.93	1/2	6.4	11/16	17.46	5/8	15.87	16.3	23.1	30.5	26.2
GME 06-02N	3/8	9.52	1/8	4.8	5/8	15.87	11/16	17.46	16.8	23.1	30.5	20.8
GME 06-04N	3/8	9.52	1/4	7.1	5/8	15.87	11/16	17.46	16.8	23.1	30.5	25.4
GME 06-06N	3/8	9.52	3/8	7.1	11/16	17.46	11/16	17.46	16.8	23.9	31.2	26.2
GME 06-08N	3/8	9.52	1/2	7.1	13/16	20.63	11/16	17.46	16.8	25.9	33.3	33.0
GME 06-12N	3/8	9.52	3/4	7.1	1-1/16	26.98	11/16	17.46	16.8	29.7	37.1	36.8
GME 08-02N	1/2	12.70	1/8	4.8	13/16	20.63	7/8	22.22	22.9	25.9	36.1	23.3
GME 08-04N	1/2	12.70	1/4	7.1	13/16	20.63	7/8	22.22	22.9	25.9	36.1	28.3
GME 08-06N	1/2	12.70	3/8	9.7	13/16	20.63	7/8	22.22	22.9	25.9	36.1	28.3
GME 08-08N	1/2	12.70	1/2	10.4	13/16	20.63	7/8	22.22	22.9	25.9	36.1	33.0
GME 08-12N	1/2	12.70	3/4	10.4	1-1/16	26.98	7/8	22.22	22.9	29.7	39.9	36.8
GME 08-16N	1/2	12.70	1	10.4	1-3/8	34.92	7/8	22.22	22.9	34.6	44.8	46.5
GME 10-06N	5/8	15.87	3/8	9.7	15/16	23.81	1	25.40	24.4	27.9	38.1	30.2
GME 10-08N	5/8	15.87	1/2	11.9	15/16	23.81	1	25.40	24.4	27.9	38.1	35.1
GME 10-12N	5/8	15.87	3/4	12.7	1-1/16	26.98	1	25.40	24.4	29.7	39.9	36.8
GME 12-06N	3/4	19.05	3/8	9.7	1-1/16	26.98	1-1/8	28.57	24.4	29.7	39.9	31.9
GME 12-08N	3/4	19.05	1/2	11.9	1-1/16	26.98	1-1/8	28.57	24.4	29.7	39.9	36.8
GME 12-12N	3/4	19.05	3/4	15.7	1-1/16	26.98	1-1/8	28.57	24.4	29.7	39.9	36.8
GME 12-16N	3/4	19.05	1	15.7	1-3/8	34.92	1-1/8	28.57	24.4	34.5	44.7	46.5
GME 14-12N	7/8	22.22	3/4	15.7	1-3/6	30.16	1-1/4	31.75	25.9	34.5	44.7	41.7
GME 16-08N	1	25.40	1/2	11.9	1-3/8	34.92	1-1/2	38.10	31.2	36.5	48.7	41.9
GME 16-12N	1	25.40	3/4	15.7	1-3/8	34.92	1-1/2	38.10	31.2	36.8	49.0	41.7
GME 16-16N	1	25.40	1	22.4	1-3/8	34.92	1-1/2	38.10	31.2	36.8	49.0	46.5
GME 20-16N	1-1/4	31.75	1	27.7	1-11/16	42.86	1-7/8	47.63	41.1	44.0	66.0	51.3
GME 20-20N	1-1/4	31.75	1-1/4	27.7	1-11/16	42.86	1-7/8	47.63	41.1	44.0	66.0	51.1
GME 24-24N	1-1/2	38.10	1-1/2	34.0	2	50.80	2-1/4	57.15	50.0	50.8	78.0	60.5
GME 32-32N	2	50.80	2	46.0	2-3/4	69.85	3	76.20	67.6	69.8	107.2	70.6

ISO Tapered threads are available for all fractional GME. To order, add “R” as a suffix instead of “N”.

[Tube to Female Pipe]

GME
Male Elbow

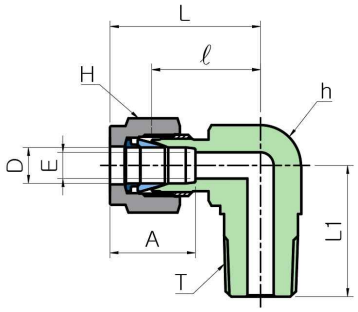

Connects Metric Tube to Female ISO Tapered Thread

Part No.	Tube O.D. D	T (PT)	Dimensions (mm)						
	mm		E Min.	h mm	H mm	A	ℓ	L	L1
GME 03M-02R	3	1/8	2.4	12.70	11.11	12.9	17.0	23.6	17.8
GME 03M-04R	3	1/4	2.4	12.70	11.11	12.9	18.0	24.6	23.4
GME 04M-02R	4	1/8	2.4	12.70	12.70	13.7	18.8	25.4	18.8
GME 04M-04R	4	1/4	2.4	12.70	12.70	13.7	18.8	25.4	23.4
GME 06M-02R	6	1/8	4.8	12.70	14.28	15.3	19.6	27.0	18.8
GME 06M-04R	6	1/4	4.8	12.70	14.28	15.3	19.6	27.0	23.4
GME 06M-06R	6	3/8	4.8	17.46	14.28	15.3	22.4	29.8	26.2
GME 06M-08R	6	1/2	4.8	20.63	14.28	15.3	24.4	31.8	33.0
GME 08M-02R	8	1/8	4.8	14.28	15.87	16.2	21.3	28.8	19.8
GME 08M-04R	8	1/4	6.4	14.28	15.87	16.2	21.3	28.8	24.4
GME 08M-06R	8	3/8	6.4	17.46	15.87	16.2	23.1	30.6	26.2
GME 08M-08R	8	1/2	6.4	20.63	15.87	16.2	25.1	32.6	33.0
GME 10M-02R	10	1/8	4.8	17.46	19.05	17.2	23.9	31.5	21.6
GME 10M-04R	10	1/4	7.1	17.46	19.05	17.2	23.9	31.5	26.2
GME 10M-06R	10	3/8	7.9	17.46	19.05	17.2	23.9	31.5	26.2
GME 10M-08R	10	1/2	7.9	20.63	19.05	17.2	25.9	33.5	33.0
GME 12M-02R	12	1/8	4.8	20.63	22.22	22.8	25.9	36.0	23.6
GME 12M-04R	12	1/4	7.1	20.63	22.22	22.8	25.9	36.0	28.2
GME 12M-06R	12	3/8	9.5	20.63	22.22	22.8	25.9	36.0	28.2
GME 12M-08R	12	1/2	9.5	20.63	22.22	22.8	25.9	36.0	33.0
GME 12M-12R	12	3/4	9.5	26.98	22.22	22.8	29.7	39.8	36.8
GME 14M-08R	14	1/2	11.9	23.81	25.40	24.4	27.9	38.0	35.1
GME 15M-08R	15	1/2	11.9	23.81	25.40	24.4	27.9	38.0	35.1
GME 16M-06R	16	3/8	9.5	23.81	25.40	24.4	27.9	38.0	30.2
GME 16M-08R	16	1/2	11.9	23.81	25.40	24.4	27.9	38.0	35.1
GME 16M-12R	16	3/4	12.7	26.98	25.40	24.4	29.7	39.8	36.8
GME 18M-08R	18	1/2	11.9	26.98	30.16	24.4	29.7	39.8	36.8
GME 18M-12R	18	3/4	15.1	26.98	30.16	24.4	29.7	39.8	36.8
GME 20M-08R	20	1/2	11.9	34.92	31.75	26.0	34.5	44.6	41.7
GME 20M-12R	20	3/4	15.9	34.92	31.75	26.0	34.5	44.6	41.7
GME 22M-12R	22	3/4	15.9	34.92	31.75	26.0	34.5	44.6	41.7
GME 25M-12R	25	3/4	15.9	34.92	38.10	31.3	36.8	49.1	41.7
GME 25M-16R	25	1	21.8	34.92	38.10	31.3	36.8	49.1	46.5
GME 30M-20R	30	1-1/4	26.2	46.04	50.80	39.6	48.3	69.9	53.1
GME 32M-20R	32	1-1/4	27.8	46.04	50.80	42.0	49.3	72.3	53.1
GME 38M-32R	38	1-1/2	33.7	55.56	57.15	49.4	56.4	84.0	60.4

NPT threads are available for all metric GME. To order, add “N” as a suffix instead of “R”.

[Tube to Female Pipe]

GME45D

45˚ Male Elbow

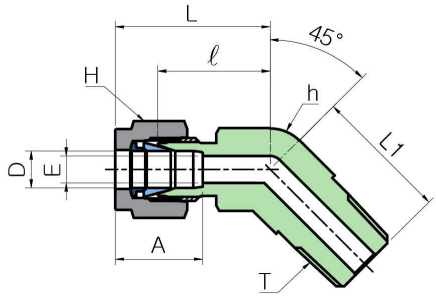

Connects Fractional(Inch) Tube to Female NPT Thread

Part No.	Tube O.D. D		T (NPT)	Dimensions (mm)								
				E Min.	h		H		A	ℓ	L	L1
	inch	mm			inch	mm	inch	mm				
GME45D 04-02N	1/4	6.35	1/8	4.8	1/2	12.70	9/16	14.28	15.2	17.3	24.6	16.5
GME45D 04-04N	1/4	6.35	1/4	4.8	1/2	12.70	9/16	14.28	15.2	17.3	24.6	21.1
GME45D 06-02N	3/8	9.52	1/8	4.8	5/8	15.87	11/16	17.46	16.8	20.6	27.9	18.3
GME45D 06-04N	3/8	9.52	1/4	7.1	5/8	15.87	11/16	17.46	16.8	20.6	27.9	22.9
GME45D 06-06N	3/8	9.52	3/8	7.1	13/16	20.63	11/16	17.46	16.8	21.8	29.2	24.1
GME45D 08-06N	1/2	12.70	3/8	9.7	13/16	20.63	7/8	22.22	22.9	21.8	32.0	24.1
GME45D 08-08N	1/2	12.70	1/2	10.4	13/16	20.63	7/8	22.22	22.9	21.8	32.0	29.0
GME45D 12-12N	3/4	19.05	3/4	15.7	1-1/8	28.57	1-1/8	28.57	24.4	23.9	34.0	31.0
GME45D 16-16N	1	25.40	1	22.4	1-3/8	34.92	1-1/2	38.10	31.2	28.2	40.3	37.8

ISO Tapered threads are available for all fractional GME45D. To order, add “R” as a suffix instead of “N”.

[Tube to Female Pipe]

GMRT
Male Run Tee

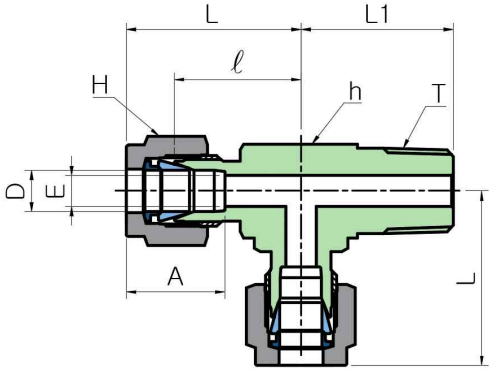

Connects Fractional(Inch) Tube to Female NPT Thread

Part No.	Tube O.D. D		T (NPT)	Dimensions (mm)								
				E Min.	h		H		A	ℓ	L	L1
	inch	mm			inch	mm	inch	mm				
GMRT 02-02N	1/8	3.17	1/8	2.3	1/2	12.70	7/16	11.11	12.7	17.0	23.6	17.8
GMRT 02-04N	1/8	3.17	1/4	2.3	1/2	12.70	7/16	11.11	12.7	18.0	24.6	23.4
GMRT 03-02N	3/16	4.76	1/8	3.0	7/16	11.11	1/2	12.70	13.7	17.8	24.4	17.8
GMRT 04-02N	1/4	6.35	1/4	4.8	1/2	12.70	9/16	14.28	15.2	19.6	26.9	18.8
GMRT 04-04N	1/4	6.35	1/8	4.8	1/2	12.70	9/16	14.28	15.2	19.6	26.9	23.4
GMRT 05-02N	5/16	7.94	1/8	4.8	9/16	14.28	5/8	15.87	16.3	22.4	29.7	20.8
GMRT 06-04N	3/8	9.52	1/4	7.1	5/8	15.87	11/16	17.46	16.8	23.1	30.5	25.4
GMRT 06-06N	3/8	9.52	3/8	7.1	11/16	17.46	11/16	17.46	16.8	23.9	31.2	28.2
GMRT 08-06N	1/2	12.70	3/8	9.7	13/16	20.63	7/8	22.22	22.9	25.9	36.1	28.2
GMRT 08-08N	1/2	12.70	1/2	10.4	13/16	20.63	7/8	22.22	22.9	25.9	36.1	33.0
GMRT 10-08N	5/8	15.87	1/2	11.9	1	25.40	1	25.40	24.4	27.9	38.1	35.1

ISO Tapered threads are available for all fractional GMRT. To order, add “R” as a suffix instead of “N”.

Connects Metric Tube to Female ISO Tapered Thread

Part No.	Tube O.D. D	T (PT)	Dimensions (mm)						
			E Min.	h	H	A	ℓ	L	L1
	mm			mm	mm				
GMRT 03M-02R	3	1/8	2.4	12.70	11.11	12.9	17.0	23.6	17.8
GMRT 03M-04R	3	1/4	2.4	12.70	11.11	12.9	18.0	24.6	23.4
GMRT 04M-02R	4	1/8	2.4	12.70	12.70	13.7	18.8	25.4	18.8
GMRT 06M-02R	6	1/8	4.8	12.70	14.28	15.3	19.6	27.0	18.8
GMRT 06M-04R	6	1/4	4.8	12.70	14.28	15.3	19.6	27.0	23.4
GMRT 08M-02R	8	1/8	4.8	14.28	15.87	16.2	21.3	28.8	19.8
GMRT 08M-04R	8	1/4	6.4	14.28	15.87	16.2	21.3	28.8	24.4
GMRT 10M-04R	10	1/4	7.1	17.46	19.05	17.2	23.9	31.5	28.2
GMRT 10M-06R	10	3/8	7.9	17.46	19.05	17.2	23.9	31.5	28.2
GMRT 12M-04R	12	1/4	7.1	20.63	22.22	22.8	25.9	36.0	28.2
GMRT 12M-06R	12	3/8	9.5	20.63	22.22	22.8	25.9	36.0	28.2
GMRT 12M-08R	12	1/2	9.5	20.63	22.22	22.8	25.9	36.0	33.0
GMRT 16M-06R	16	3/8	9.5	25.40	25.40	24.4	27.9	38.0	30.2
GMRT 16M-08R	16	1/2	11.9	25.40	25.40	24.4	27.9	38.0	35.1
GMRT 20M-12R	20	3/4	15.9	34.92	31.75	26.0	34.5	44.6	41.7

NPT threads are available for all metric GMRT. To order, add “N” as a suffix instead of “R”.

[Tube to Female Pipe]

GMBT
Male Branch Tee

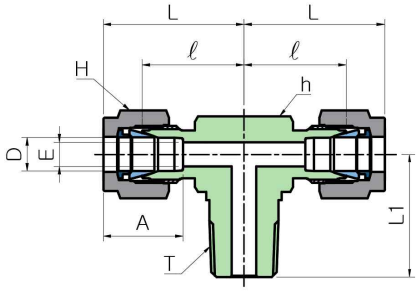

Connects Fractional(Inch) Tube to Female NPT Thread

Part No.	Tube O.D. D		T (NPT)	Dimensions (mm)								
				E Min.	h		H		A	ℓ	L	L1
	inch	mm			inch	mm	inch	mm				
GMBT 02-02N	1/8	3.17	1/8	2.3	1/2	12.70	7/16	11.11	12.7	17.0	23.6	17.8
GMBT 02-04N	1/8	3.17	1/4	2.3	1/2	12.70	7/16	11.11	12.7	18.0	24.6	23.4
GMBT 03-02N	3/16	4.76	1/8	3.0	1/2	12.70	1/2	12.70	13.7	17.8	24.4	17.8
GMBT 04-02N	1/4	6.35	1/8	4.8	1/2	12.70	9/16	14.28	15.2	19.6	26.9	18.8
GMBT 04-04N	1/4	6.35	1/4	4.8	1/2	12.70	9/16	14.28	15.2	19.6	26.9	23.4
GMBT 05-02N	5/16	7.93	1/8	4.8	9/16	14.28	5/8	15.87	16.3	22.4	29.7	20.8
GMBT 06-04N	3/8	9.52	1/4	7.1	5/8	15.87	11/16	17.46	16.8	23.1	30.5	25.4
GMBT 06-06N	3/8	9.52	3/8	7.1	11/16	17.46	11/16	17.46	16.8	23.9	31.2	28.2
GMBT 08-06N	1/2	12.70	3/8	9.7	13/16	20.63	7/8	22.22	22.9	25.9	36.1	28.2
GMBT 08-08N	1/2	12.70	1/2	10.4	13/16	20.63	7/8	22.22	22.9	25.9	36.1	33.0
GMBT 10-08N	5/8	15.87	1/2	11.9	1	25.40	1	25.40	24.4	28.7	38.9	35.8
GMBT 12-12N	3/4	19.05	3/4	15.7	1-1/16	26.98	1-1/8	28.57	24.4	29.7	39.9	36.8

ISO Tapered threads are available for all fractional GMBT. To order, add “R” as a suffix instead of “N”.

Connects Metric Tube to Female ISO Tapered Thread

Part No.	Tube O.D. D	T (PT)	Dimensions (mm)						
			E Min.	h	H	A	ℓ	L	L1
	mm			mm	mm				
GMBT 03M-02R	3	1/8	2.4	12.7	11.11	12.9	17	23.6	17.8
GMBT 03M-04R	3	1/4	2.4	12.7	11.11	12.9	18	24.6	23.4
GMBT 04M-02R	4	1/8	2.4	12.7	12.7	13.7	18.8	25.4	18.8
GMBT 06M-02R	6	1/8	4.8	12.7	14.28	15.3	19.6	27	18.8
GMBT 06M-04R	6	1/4	4.8	12.7	14.28	15.3	19.6	27	23.4
GMBT 08M-02R	8	1/8	4.8	14.28	15.87	16.2	21.3	28.8	19.8
GMBT 08M-04R	8	1/4	6.4	14.28	15.87	16.2	21.3	28.8	24.4
GMBT 10M-04R	10	1/4	7.1	17.46	19.05	17.2	23.9	31.5	28.2
GMBT 10M-06R	10	3/8	7.9	17.46	19.05	17.2	23.9	31.5	28.2
GMBT 12M-04R	12	1/4	7.1	20.63	22.22	22.8	25.9	36	28.2
GMBT 12M-06R	12	3/8	9.5	20.63	22.22	22.8	25.9	36	28.2
GMBT 12M-08R	12	1/2	9.5	20.63	22.22	22.8	25.9	36	33
GMBT 16M-06R	16	3/8	9.5	25.4	25.4	24.4	28.7	38.8	30.9
GMBT 16M-08R	16	1/2	11.9	25.4	25.4	24.4	28.7	38.8	35.8
GMBT 20M-12R	20	3/4	15.9	34.92	31.75	26	36.8	47.1	43.5

NPT threads are available for all metric GMBT. To order, add “N” as a suffix instead of “R”.

[Tube to Male Pipe]

GFC
Female Connector

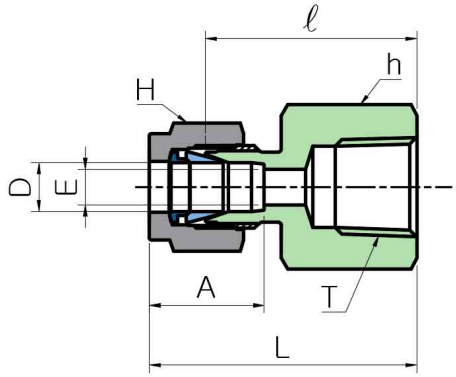

Connects Fractional Tube to Male NPT Thread

Part No.	Tube O.D. D		T (NPT)	Dimensions (mm)							
				E	h		H		A	ℓ	L
	inch	mm		Min.	inch	mm	inch	mm			
GFC 02-02N	1/8	3.17	1/8	2.3	9/16	14.28	7/16	11.11	12.7	22.1	28.7
GFC 02-04N	1/8	3.17	1/4	2.3	3/4	19.05	7/16	11.11	12.7	26.9	33.5
GFC 03-02N	3/16	4.76	1/8	3.0	9/16	14.28	1/2	12.70	13.7	23.1	29.7
GFC 04-02N	1/4	6.35	1/8	4.8	9/16	14.28	9/16	14.28	15.2	23.9	31.2
GFC 04-04N	1/4	6.35	1/4	4.8	3/4	19.05	9/16	14.28	15.2	28.4	35.8
GFC 04-06N	1/4	6.35	3/8	4.8	7/8	22.22	9/16	14.28	15.2	30.2	37.6
GFC 04-08N	1/4	6.35	1/2	4.8	1-1/16	26.98	9/16	14.28	15.2	35.1	42.4
GFC 05-02N	5/16	7.93	1/8	6.4	9/16	14.28	5/8	15.87	16.3	24.6	32.0
GFC 05-04N	5/16	7.93	1/4	6.4	3/4	19.05	5/8	15.87	16.3	29.5	36.8
GFC 06-02N	3/8	9.52	1/8	7.1	5/8	15.87	11/16	17.46	16.8	25.4	32.8
GFC 06-04N	3/8	9.52	1/4	7.1	3/4	19.05	11/16	17.46	16.8	30.2	37.6
GFC 06-06N	3/8	9.52	3/8	7.1	7/8	22.22	11/16	17.46	16.8	31.8	39.1
GFC 06-08N	3/8	9.52	1/2	7.1	1-1/16	26.98	11/16	17.46	16.8	36.6	43.9
GFC 06-12N	3/8	9.52	3/4	7.1	1-5/16	31.75	11/16	17.46	16.8	40.4	47.8
GFC 08-04N	1/2	12.70	1/4	10.4	13/16	20.63	7/8	22.22	22.9	30.2	40.4
GFC 08-06N	1/2	12.70	3/8	10.4	7/8	22.22	7/8	22.22	22.9	31.8	41.9
GFC 08-08N	1/2	12.70	1/2	10.4	1-1/16	26.98	7/8	22.22	22.9	36.6	46.7
GFC 08-12N	1/2	12.70	3/4	10.4	1-5/16	31.75	7/8	22.22	22.9	38.1	48.3
GFC 10-06N	5/8	15.87	3/8	12.7	15/16	23.81	1	25.40	24.4	31.8	41.9
GFC 10-08N	5/8	15.87	1/2	12.7	1-1/16	26.98	1	25.40	24.4	36.6	46.7
GFC 12-08N	3/4	19.05	1/2	15.7	1-1/16	26.98	1-1/8	28.57	24.4	36.6	46.7
GFC 12-12N	3/4	19.05	3/4	15.7	1-5/16	31.75	1-1/8	28.57	24.4	38.1	48.3
GFC 14-12N	7/8	22.22	3/4	18.3	1-5/16	31.75	1-1/4	31.75	25.9	39.6	49.8
GFC 16-12N	1	25.40	3/4	22.4	1-3/8	34.92	1-1/2	38.10	31.2	41.1	53.3
GFC 16-16N	1	25.40	1	22.4	1/5-8	41.27	1-1/2	38.10	31.2	50.0	62.2
GFC 20-20N	1-1/4	31.75	1-1/4	27.7	2-1/8	53.98	1-7/8	47.63	41.1	52.6	74.7
GFC 24-24N	1-1/2	38.10	1-1/2	34.0	2-3/8	60.33	2-1/4	57.15	50.0	56.1	83.3
GFC 32-32N	2	50.80	2	46.0	2-7/8	73.03	3	76.20	67.6	64.3	101.6

ISO Tapered threads are available for all fractional GFC. To order, add “R” as a suffix instead of “N”

[Tube to Male Pipe]

GFC
Female Connector

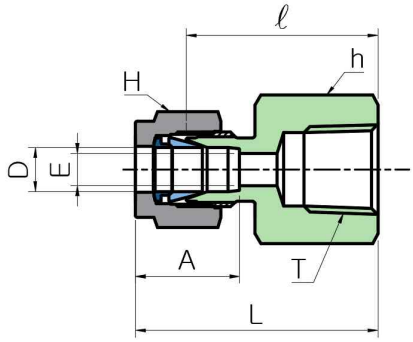

Connects Metric Tube to Male ISO Tapered Thread

Part No.	Tube O.D. D	T (PT)	Dimensions (mm)`					
			E Min.	h	H	A	ℓ	L
	mm			mm	mm			
GFC 03M-02R	3	1/8	2.4	14.28	11.11	12.7	22.1	28.7
GFC 03M-04R	3	1/4	2.4	19.05	11.11	12.9	26.9	33.5
GFC 04M-02R	4	1/8	2.4	14.28	11.11	12.9	23.1	29.7
GFC 06M-02R	6	1/8	4.8	14.28	12.70	13.7	23.9	31.3
GFC 06M-04R	6	1/4	4.8	19.05	14.28	15.3	28.4	35.8
GFC 06M-06R	6	3/8	4.8	22.22	14.28	15.3	29.5	36.9
GFC 06M-08R	6	1/2	4.8	26.98	14.28	15.3	35.1	42.5
GFC 08M-02R	8	1/8	6.4	14.28	14.28	15.3	24.6	32.1
GFC 08M-04R	8	1/4	6.4	19.05	15.87	16.2	29.5	37.0
GFC 08M-06R	8	3/8	6.4	22.22	15.87	16.2	30.2	37.7
GFC 08M-08R	8	1/2	6.4	26.98	15.87	16.2	35.8	43.3
GFC 10M-02R	10	1/8	7.9	17.46	15.87	16.2	25.4	33.0
GFC 10M-04R	10	1/4	7.9	19.05	19.05	17.2	30.2	37.8
GFC 10M-06R	10	3/8	7.9	22.22	19.05	17.2	31.0	38.6
GFC 10M-08R	10	1/2	7.9	26.98	19.05	17.2	36.6	44.2
GFC 12M-02R	12	1/8	8.3	22.22	19.05	17.2	28.4	38.5
GFC 12M-04R	12	1/4	9.5	22.22	22.22	22.8	30.2	40.3
GFC 12M-06R	12	3/8	9.5	22.22	22.22	22.8	31.0	41.1
GFC 12M-08R	12	1/2	9.5	26.98	22.22	22.8	36.6	46.7
GFC 12M-12R	12	3/4	9.5	31.75	22.22	22.8	38.9	49.0
GFC 15M-08R	15	1/2	11.9	26.98	22.22	22.8	36.6	46.7
GFC 16M-08R	16	1/2	12.7	26.98	25.40	24.4	36.8	46.9
GFC 20M-08R	20	1/2	15.9	30.16	25.40	24.4	37.8	47.9
GFC 20M-12R	20	3/4	15.9	31.75	31.75	26.0	39.6	49.7
GFC 22M-12R	22	3/4	18.3	34.92	31.75	26.0	39.6	49.7
GFC 22M-16R	22	1	18.3	41.27	31.75	26.0	47.8	57.9
GFC 25M-12R	25	3/4	21.8	34.92	31.75	26.0	41.1	53.4
GFC 25M-16R	25	1	21.8	41.27	38.10	31.3	50.0	62.3

NPT threads are available for all metric GFC. To order, add “N” as a suffix instead of “R”.

[Tube to Male Pipe]

GGC
Gauge Connector

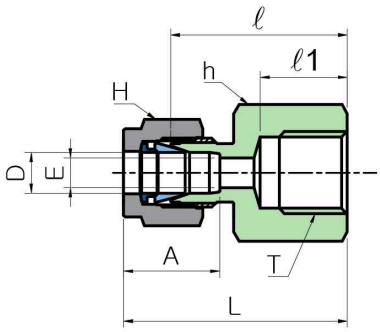

Connects Fractional(Inch) Tube to Female NPT Thread

Part No.	Tube O.D. D		T (NPT)	Dimensions (mm)								
				E Min.	h		H		A	ℓ	L	L1
	inch	mm			inch	mm	inch	mm				
GGC 04-02G	1/4	6.35	1/8	4.8	9/16	14.28	9/16	14.28	15.2	26.3	12	33.6
GGC 04-04G	1/4	6.35	1/4	4.8	3/4	19.05	9/16	14.28	15.2	30.2	13	37.6
GGC 04-06G	1/4	6.35	3/8	4.8	15/16	23.81	9/16	14.28	15.2	30.2	14.2	37.6
GGC 04-08G	1/4	6.35	1/2	4.8	1-1/16	26.98	9/16	14.28	15.2	36.1	18.8	43.4
GGC 05-04G	5/16	7.93	1/4	5.6	3/4	19.05	5/8	15.87	16.3	31	13	38.4
GGC 05-08G	5/16	7.93	1/2	7.1	1-1/16	26.98	5/8	15.87	16.3	33.5	18.8	40.9
GGC 06-04G	3/8	9.52	1/4	5.6	3/4	19.05	11/16	17.46	16.8	31.8	13	39.1
GGC 06-06G	3/8	9.52	3/8	6.6	15/16	23.81	11/16	17.46	16.8	31.2	14.2	38.6
GGC 06-08G	3/8	9.52	1/2	7.1	1-1/16	26.98	11/16	17.46	16.8	34.5	19	41.9
GGC 08-04G	1/2	12.7	1/4	5.6	7/8	22.22	7/8	22.22	22.9	31.8	13	42
GGC 08-06G	1/2	12.7	3/8	6.6	15/16	23.81	7/8	22.22	22.9	34.3	14.2	44.5
GGC 08-08G	1/2	12.7	1/2	7.1	1-1/16	26.98	7/8	22.22	22.9	38.1	19	48.3

Connects Metric Tube to Female ISO Tapered Thread

Part No.	Tube O.D. D	T (PT)	Dimensions (mm)						
			E Min.	h	H	A	ℓ	L	L1
	mm			mm	mm				
GGC 03M-04G	3	1/4	2.4	19.05	11.11	12.9	28.7	13.0	35.3
GGC 06M-04G	6	1/4	4.8	19.05	14.28	15.3	30.2	13.0	37.6
GGC 06M-06G	6	3/8	4.8	23.81	14.28	15.3	30.2	14.2	37.6
GGC 06M-08G	6	1/2	4.8	26.98	14.28	15.3	36.3	19.0	43.7
GGC 08M-04G	8	1/4	5.5	19.05	15.87	16.2	31.0	13.0	38.5
GGC 08M-06G	8	3/8	6.5	23.81	15.87	16.2	28.7	14.0	36.2
GGC 08M-08G	8	1/2	7.0	26.98	15.87	16.2	33.0	19.0	40.5
GGC 10M-04G	10	1/4	5.5	19.05	19.05	17.2	31.8	13.0	39.4
GGC 10M-06G	10	3/8	6.5	23.81	19.05	17.2	31.2	14.2	38.8
GGC 10M-08G	10	1/2	7.0	26.98	19.05	17.2	34.5	19.0	42.1
GGC 12M-04G	12	1/4	5.5	22.22	22.22	22.8	31.8	13.0	41.9
GGC 12M-06G	12	3/8	6.5	23.81	22.22	22.8	34.3	14.0	44.4
GGC 12M-08G	12	1/2	7.0	26.98	22.22	22.8	38.1	19.0	48.2
GGC 20M-08G	20	1/2	7.0	30.16	31.75	26.0	44.2	19.0	54.3
GGC 22M-08G	22	1/2	7.0	30.16	31.75	26.0	44.2	19.0	54.3

[Tube to Male Pipe]

GBFC

Bulkhead Female Connector

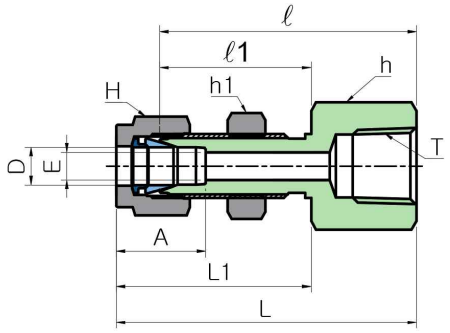

Connects Fractional(Inch) Tube to Female NPT Thread

Part No.	Tube O.D. D		T (NPT)	Dimensions (mm)														
				E Min.	h		h1		H		A	ℓ	ℓ1	L	L1	Panel Hole Size	Max Panel Thickness
	inch	mm			inch	mm	inch	mm	inch	mm							
GBFC 02-02N	1/8	3.17	1/8	2.3	9/16	14.28	1/2	12.70	7/16	11.11	12.7	38.1	24.6	44.7	31.2	8.3	12.7
GBFC 04-02N	1/4	6.35	1/8	4.8	5/8	15.87	5/8	15.87	9/16	14.28	15.2	39.6	26.2	47.0	33.5	11.5	10.2
GBFC 04-04N	1/4	6.35	1/4	4.8	3/4	19.05	5/8	15.87	9/16	14.28	15.2	44.5	26.2	51.8	33.5	11.5	10.2
GBFC 06-04N	3/8	9.52	1/4	7.1	3/4	19.05	3/4	19.05	11/16	17.46	16.8	47.8	29.5	55.1	36.8	14.7	11.2
GBFC 08-06N	1/2	12.70	3/8	10.4	15/16	23.81	15/16	23.81	7/8	22.22	22.9	51.6	31.8	61.7	41.9	19.4	12.7
GBFC 08-08N	1/2	12.70	1/2	10.4	1-1/16	26.98	15/16	23.81	7/8	22.22	22.9	56.4	31.8	66.5	41.9	19.4	12.7
GBFC 12-12N	3/4	19.05	3/4	15.7	1-5/16	33.33	1-3/16	30.16	1-1/8	28.57	24.4	63.6	37.3	73.7	47.4	25.8	16.8

ISO Tapered threads are available for all fractional GBFC. To order, add “R” as a suffix instead of “N”

Connects Metric Tube to Female ISO Tapered Thread

Part No.	Tube O.D. D	T (PT)	Dimensions (mm)										
			E Min.	h	h1	H	A	ℓ	ℓ1	L	L1	Panel Hole Size	Max Panel Thickness
	mm												
GBFC 06M-02R	6	1/8	4.8	15.87	15.87	14.28	15.3	39.6	26.2	47.0	33.6	11.5	10.2
GBFC 06M-04R	6	1/4	4.8	19.05	15.87	14.28	15.3	44.4	26.2	51.8	33.6	11.5	10.2
GBFC 08M-04R	8	1/4	6.4	19.05	17.46	15.87	16.2	46.7	28.6	54.2	36.1	13.1	11.2
GBFC 12M-08R	12	1/2	9.5	26.98	23.81	22.22	22.8	56.4	31.8	66.5	41.9	19.5	12.7

NPT threads are available for all metric GBFC. To order, add “N” as a suffix instead of “R”.

[Tube to Male Pipe]

GFE
Female Elbow

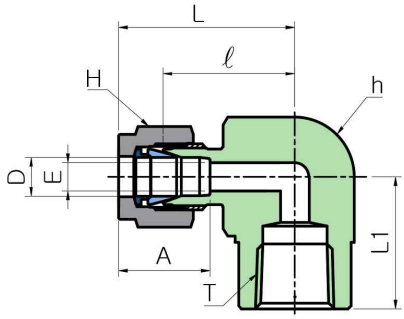

Connects Fractional(Inch) Tube to Female NPT Thread

Part No.	Tube O.D. D		T (NPT)	Dimensions (mm)								
				E Min.	h		H		A	ℓ	L	L1
	inch	mm			inch	mm	inch	mm				
GFE 02-02N	1/8	3.17	1/8	2.3	1/2	12.70	7/16	11.11	12.7	18.0	24.6	19.1
GFE 02-04N	1/8	3.17	1/4	2.3	11/16	17.46	7/16	11.11	12.7	20.8	27.4	22.4
GFE 03-02N	3/16	4.76	1/8	3.0	1/2	12.70	1/2	12.70	13.7	18.8	25.4	19.1
GFE 04-02N	1/4	6.35	1/8	4.8	1/2	12.70	9/16	14.28	15.2	19.6	26.9	19.1
GFE 04-04N	1/4	6.35	1/4	4.8	11/16	17.46	9/16	14.28	15.2	22.4	29.7	22.4
GFE 04-06N	1/4	6.35	3/8	4.8	13/16	20.63	9/16	14.28	15.2	24.4	31.8	22.4
GFE 04-08N	1/4	6.35	1/2	4.8	1	25.40	9/16	14.28	15.2	27.2	34.5	28.4
GFE 05-02N	5/16	7.93	1/8	6.4	9/16	14.28	5/8	15.87	16.3	21.3	28.7	19.1
GFE 05-04N	5/16	7.93	1/4	6.4	11/16	17.46	5/8	15.87	16.3	23.1	30.5	22.4
GFE 06-02N	3/8	9.52	1/8	7.1	5/8	15.87	11/16	17.46	16.8	23.1	30.5	19.1
GFE 06-04N	3/8	9.52	1/4	7.1	11/16	17.46	11/16	17.46	16.8	23.9	31.2	22.4
GFE 06-06N	3/8	9.52	3/8	7.1	13/16	20.63	11/16	17.46	16.8	25.9	33.3	22.4
GFE 06-08N	3/8	9.52	1/2	7.1	1	25.40	11/16	17.46	16.8	28.7	36.1	28.4
GFE 08-04N	1/2	12.70	1/4	10.4	13/16	20.63	7/8	22.22	22.9	25.9	36.1	22.4
GFE 08-06N	1/2	12.70	3/8	10.4	13/16	20.63	7/8	22.22	22.9	25.9	36.1	22.4
GFE 08-08N	1/2	12.70	1/2	10.4	1	25.40	7/8	22.22	22.9	28.7	38.9	28.4
GFE 10-06N	5/8	15.87	3/8	12.7	15/16	23.81	1	25.40	24.4	27.9	38.1	22.4
GFE 10-08N	5/8	15.87	1/2	12.7	1-1/16	26.98	1	25.40	24.4	29.7	39.9	28.4
GFE 12-08N	3/4	19.05	1/2	15.7	1-1/16	26.98	1-1/8	28.57	24.4	29.7	39.9	28.4
GFE 12-12N	3/4	19.05	3/4	15.7	1-3/8	34.92	1-1/8	28.57	24.4	34.5	44.7	31.8
GFE 14-12N	7/8	22.22	3/4	18.3	1-3/8	34.92	1-1/4	31.75	25.9	34.5	44.7	31.8
GFE 16-12N	1	25.40	3/4	22.4	1-3/8	34.92	1-1/2	38.10	31.2	36.8	49.0	31.8
GFE 16-16N	1	25.40	1	22.4	1-11/16	42.86	1-1/2	38.10	31.2	41.4	53.6	38.1

ISO Tapered threads are available for all fractional GFE. To order, add “R” as a suffix instead of “N”

Connects Metric Tube to Female ISO Tapered Thread

Part No.	Tube O.D. D	T (PT)	Dimensions (mm)						
			E Min.	h	H	A	ℓ	L	L1
	mm			mm	mm				
GFE 06M-02R	6	1/8	4.8	12.7	14.28	15.3	19.6	27	19
GFE 06M-04R	6	1/4	4.8	17.46	14.28	15.3	22.4	29.8	22.4
GFE 06M-06R	6	3/8	4.8	20.63	14.28	15.3	24.4	31.8	22.4
GFE 06M-08R	6	1/2	4.8	25.4	14.28	15.3	27.2	34.6	28.4
GFE 08M-04R	8	1/4	6.4	17.46	15.87	16.2	23.1	30.6	22.4
GFE 08M-08R	8	1/2	6.4	25.4	15.87	16.2	28	35.5	28.4
GFE 10M-02R	10	1/8	7.9	17.46	19.05	17.2	23.9	31.5	19
GFE 10M-04R	10	1/4	7.9	20.63	19.05	17.2	25.9	33.5	22.4
GFE 10M-06R	10	3/8	7.9	20.63	19.05	17.2	25.9	33.5	22.4
GFE 10M-08R	10	1/2	7.9	25.4	19.05	17.2	28.7	36.3	28.4
GFE 12M-04R	12	1/4	9.5	20.63	22.22	22.8	25.9	36	22.4
GFE 12M-06R	12	3/8	9.5	20.63	22.22	22.8	25.9	36	22.4
GFE 12M-08R	12	1/2	9.5	25.4	22.22	22.8	28.7	38.8	28.4
GFE 16M-08R	20	1/2	12.7	26.98	25.4	24.4	29.7	39.8	28.4

NPT threads are available for all metric GFE. To order, add “N” as a suffix instead of “R”.

[Tube to Male Pipe]

GFRT
Female Run Tee

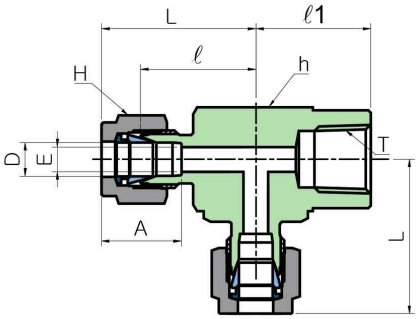

Connects Fractional(Inch) Tube to Female NPT Thread

Part No.	Tube O.D. D		T (NPT)	Dimensions (mm)								
				E Min.	h		H		A	ℓ	L	L1
	inch	mm			inch	mm	inch	mm				
GFRT 02-02N	1/8	3.17	1/8	2.3	1/2	12.70	7/16	11.11	12.7	18.0	24.6	19.1
GFRT 04-02N	1/4	6.35	1/8	4.8	9/16	14.28	9/16	14.28	15.2	19.6	26.9	19.1
GFRT 04-04N	1/4	6.35	1/4	4.8	11/16	17.46	9/16	14.28	15.2	22.4	29.7	22.4
GFRT 06-04N	3/8	9.52	1/4	7.1	11/16	17.46	11/16	17.46	16.8	23.9	31.2	22.4
GFRT 08-06N	1/2	12.70	3/8	10.4	13/16	20.63	7/8	22.22	22.9	25.9	36.1	22.4
GFRT 08-08N	1/2	12.70	1/2	10.4	1-1/16	26.98	7/8	22.22	22.9	28.7	38.9	28.4
GFRT 12-12N	3/4	19.05	3/4	15.7	1-3/8	34.92	1-1/8	28.57	24.4	34.5	44.7	31.8
GFRT 16-12N	1	25.40	3/4	22.4	1-3/8	34.92	1-1/2	38.10	31.2	36.8	49.0	31.8
GFRT 16-16N	1	25.40	1	22.4	1-11/16	42.86	1-1/2	38.10	31.2	41.4	53.6	38.1

ISO Tapered threads are available for all fractional GFRT. To order, add “R” as a suffix instead of “N”

Connects Metric Tube to Female ISO Tapered Thread

Part No.	Tube O.D. D	T (PT)	Dimensions (mm)						
			E Min.	h	H	A	ℓ	L	L1
	mm			mm	mm				
GFRT 06M-02R	6	1/8	4.8	12.70	14.28	15.3	19.6	27.0	19.0
GFRT 06M-04R	6	1/4	4.8	17.46	14.28	15.3	22.4	29.8	22.4
GFRT 06M-08R	6	1/2	4.8	26.98	14.28	15.3	27.2	34.6	28.4
GFRT 08M-02R	8	1/8	6.4	15.87	15.87	16.2	22.4	29.9	19.0
GFRT 08M-04R	8	1/4	6.4	17.46	15.87	16.2	23.1	30.6	22.4
GFRT 08M-06R	8	3/8	6.4	20.63	15.87	16.2	25.2	32.7	22.4
GFRT 08M-08R	8	1/2	6.4	26.98	25.40	16.2	28.0	35.5	28.4
GFRT 10M-04R	10	1/4	7.9	20.63	19.05	17.2	25.9	33.5	22.4
GFRT 12M-04R	12	1/4	9.5	20.63	22.22	22.8	25.9	36.0	22.4
GFRT 12M-06R	12	3/8	9.5	20.63	22.22	22.8	25.9	36.0	22.4
GFRT 12M-08R	12	1/2	9.5	26.98	22.22	22.8	29.7	39.8	28.4
GFRT 16M-08R	16	1/2	12.7	26.98	25.40	24.4	29.7	39.8	28.4

NPT threads are available for all metric GFRT. To order, add “N” as a suffix instead of “R”.

[Tube to Male Pipe]

GFBT
Female Branch Tee

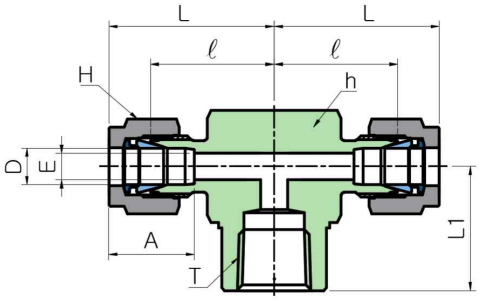

Connects Fractional(Inch) Tube to Female NPT Thread

Part No.	Tube O.D. D		T (NPT)	Dimensions (mm)								
				E Min.	h		H		A	ℓ	L	L1
	inch	mm			inch	mm	inch	mm				
GFBT 02-02N	1/8	3.17	1/8	4.8	1/2	12.70	7/16	11.11	12.7	18.0	24.6	19.1
GFBT 04-02N	1/4	6.35	1/8	4.8	11/16	17.46	9/16	14.28	15.2	19.6	26.9	19.1
GFBT 04-04N	1/4	6.35	1/4	7.1	11/16	17.46	9/16	14.28	15.2	22.4	29.7	22.4
GFBT 06-04N	3/8	9.52	1/4	10.4	13/16	20.63	11/16	17.46	16.8	23.9	31.2	22.4
GFBT 08-04N	1/2	12.70	1/4	10.4	13/16	20.63	7/8	22.22	22.9	25.9	36.1	22.4
GFBT 08-06N	1/2	12.70	3/8	10.4	1-1/16	26.98	7/8	22.22	22.9	25.9	36.1	22.4
GFBT 08-08N	1/2	12.70	1/2	12.7	1-1/16	26.98	7/8	22.22	22.9	28.7	38.9	28.4
GFBT 10-08N	5/8	15.87	1/2	15.7	1-3/8	34.92	1	25.40	24.4	28.7	38.9	28.4
GFBT 12-12N	3/4	19.05	3/4	22.4	1-3/8	34.92	1-1/8	28.57	24.4	34.5	44.7	31.8
GFBT 16-12N	1	25.40	3/4	22.4	1-11/16	42.86	1-1/2	38.10	31.2	36.8	49.0	31.8
GFBT 16-16N	1	15.40	1	22.4	1-11/16	42.86	1-1/2	38.10	31.2	41.4	53.6	38.1

ISO Tapered threads are available for all fractional GFBT. To order, add “R” as a suffix instead of “N”

Connects Metric Tube to Female ISO Tapered Thread

Part No.	Tube O.D. D	T (PT)	Dimensions (mm)						
			E Min.	h	H	A	ℓ	L	L1
	mm			mm	mm				
GFBT 06M-02R	6	1/8	4.8	12.70	14.28	15.3	19.6	27.0	19.0
GFBT 06M-04R	6	1/4	4.8	17.46	14.28	15.3	22.4	29.8	22.4
GFBT 06M-06R	6	3/8	4.8	20.63	14.28	15.3	24.4	31.8	22.4
GFBT 06M-08R	6	1/2	4.8	25.40	14.28	15.3	27.2	34.6	28.4
GFBT 08M-02R	8	1/8	6.4	15.87	15.87	16.2	22.4	29.9	19.0
GFBT 08M-04R	8	1/4	6.4	17.46	15.87	16.2	23.1	30.6	22.4
GFBT 08M-06R	8	3/8	6.4	20.63	15.87	16.2	25.2	32.7	22.4
GFBT 08M-08R	8	1/2	6.4	26.98	15.87	16.2	28.0	35.5	28.4
GFBT 10M-04R	10	1/4	7.9	20.63	19.05	17.2	25.9	33.5	22.4
GFBT 10M-06R	10	3/8	7.9	20.63	19.05	17.2	25.9	33.5	22.4
GFBT 10M-08R	10	1/2	7.9	26.98	19.05	17.2	28.7	36.3	28.4
GFBT 12M-04R	12	1/4	9.5	20.63	22.22	22.8	25.9	36.0	22.4
GFBT 12M-06R	12	3/8	9.5	20.63	22.22	22.8	25.9	36.0	22.4
GFBT 12M-08R	12	1/2	9.5	26.98	22.22	22.8	28.7	38.8	28.4
GFBT 16M-08R	16	1/2	12.7	26.98	25.40	24.4	28.7	38.8	28.4

NPT threads are available for all metric GFBT. To order, add “N” as a suffix instead of “R”.

[Tube to Tube Union]

GU
Union

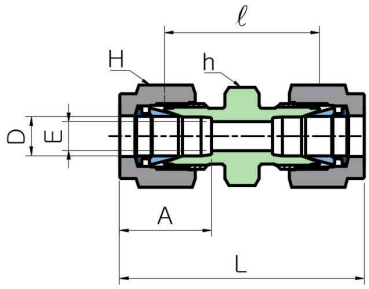

Connects Fractional(Inch) Tube

Part No.	Tube O.D. D		Dimensions (mm)							
			E Min.	h		H		A	ℓ	L
	inch	mm		inch	mm	inch	mm			
GU 01	1/16	1.58	1.3	5/16	7.93	5/16	7.93	8.6	17.5	25.1
GU 02	1/8	3.17	2.3	7/16	11.11	7/16	11.11	12.7	22.4	35.6
GU 03	3/16	4.76	3.0	7/16	11.11	1/2	12.70	12.7	24.1	37.3
GU 04	1/4	6.35	4.8	1/2	12.70	9/16	14.28	15.2	26.2	40.9
GU 05	5/16	7.93	6.4	9/16	14.28	5/8	15.87	16.3	28.2	42.9
GU 06	3/8	9.52	7.1	5/8	15.87	11/16	17.46	16.8	30.2	45.0
GU 08	1/2	12.70	10.4	13/16	20.63	7/8	22.22	22.9	31.0	51.3
GU 10	5/8	15.87	12.7	15/16	23.81	1	25.40	24.4	31.8	52.1
GU 12	3/4	19.05	15.7	1-1/16	26.98	1-1/8	28.57	24.4	33.3	53.6
GU 14	7/8	22.22	18.3	1-3/16	30.16	1-1/4	31.75	25.9	35.1	55.4
GU 16	1	25.40	22.4	1-3/8	34.92	1-1/2	38.10	31.2	40.4	64.8
GU 20	1-1/4	31.75	27.7	1-3/4	44.45	1-7/8	47.63	41.1	48.0	92.2
GU 24	1-1/2	38.10	34.0	2-1/8	53.97	2-1/4	57.15	50.0	53.6	108.0
GU 32	2	50.80	46.0	2-3/4	69.85	3	76.20	67.6	74.7	149.4

Connects Metric Tube

Part No.	Tube O.D. D	Dimensions (mm)					
		E Min.	h	H	A	ℓ	L
	mm		mm	mm			
GU 02M	2	1.7	11.11	11.11	12.9	22.4	35.6
GU 03M	3	2.4	11.11	11.11	12.9	22.1	35.3
GU 04M	4	2.4	11.11	12.70	13.7	24.1	37.3
GU 06M	6	4.8	12.70	14.28	15.3	26.2	41.0
GU 08M	8	6.4	14.28	15.87	16.2	28.2	43.2
GU 10M	10	7.9	17.46	19.05	17.2	31.0	46.2
GU 12M	12	9.5	20.63	22.22	22.8	31.0	51.2
GU 14M	14	11.1	23.81	25.40	24.4	31.8	52.0
GU 15M	15	11.9	23.81	25.40	24.4	31.8	52.0
GU 16M	16	12.7	23.81	25.40	24.4	31.8	52.0
GU 18M	18	15.1	26.98	30.16	24.4	33.3	53.5
GU 22M	22	18.3	30.16	31.75	26.0	34.8	55.0
GU 25M	25	21.8	34.92	38.10	31.3	40.4	65.0
GU 28M	28	21.8	44.45	47.63	36.6	43.4	85.0
GU 30M	30	26.2	44.45	50.80	39.6	49.5	92.7
GU 32M	32	28.6	44.45	50.80	42.0	51.3	97.3
GU 38M	38	33.7	55.56	57.15	49.4	58.4	114.0

[Tube to Tube Union]

GUO
Orifice Union

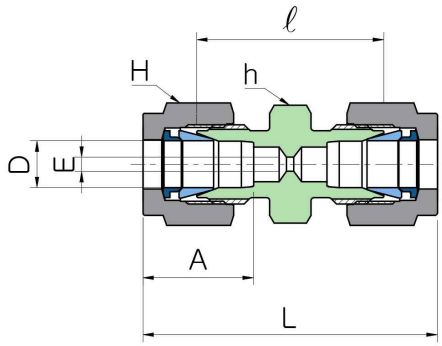

Connects Fractional(Inch) Tube

Part No.	Tube O.D. D		Dimensions (mm)							
			E Orifice	h		H		A	ℓ	L
	inch	mm		inch	mm	inch	mm			
GUO 02-05	1/8	3.17	0.5	7/16	11.11	7/16	11.11	12.7	22.4	35.6
GUO 02-12	1/8	3.17	1.2	7/16	11.11	7/16	11.11	12.7	22.4	35.6
GUO 02-15	1/8	3.17	1.5	7/16	11.11	7/16	11.11	12.7	22.4	35.6
GUO 02-20	1/8	3.17	2.0	7/16	11.11	7/16	11.11	12.7	22.4	35.6
GUO 04-05	1/4	6.35	0.5	1/2	12.70	9/16	14.28	15.2	26.2	40.9
GUO 04-12	1/4	6.35	1.2	1/2	12.70	9/16	14.28	15.2	26.2	40.9
GUO 04-15	1/4	6.35	1.5	1/2	12.70	9/16	14.28	15.2	26.2	40.9
GUO 04-20	1/4	6.35	2.0	1/2	12.70	9/16	14.28	15.2	26.2	40.9
GUO 06-05	3/8	9.52	0.5	5/8	15.87	11/16	17.46	16.8	30.2	45.0
GUO 06-12	3/8	9.52	1.2	5/8	15.87	11/16	17.46	16.8	30.2	45.0
GUO 06-15	3/8	9.52	1.5	5/8	15.87	11/16	17.46	16.8	30.2	45.0
GUO 06-20	3/8	9.52	2.0	5/8	15.87	11/16	17.46	16.8	30.2	45.0
GUO 08-05	1/2	12.70	0.5	13/16	20.63	7/8	22.22	22.9	31.0	51.3
GUO 08-12	1/2	12.70	1.2	13/16	20.63	7/8	22.22	22.9	31.0	51.3
GUO 08-15	1/2	12.70	1.5	13/16	20.63	7/8	22.22	22.9	31.0	51.3
GUO 08-20	1/2	12.70	2.0	13/16	20.63	7/8	22.22	22.9	31.0	51.3

[Tube to Tube Union]

GRU
Reducing Union

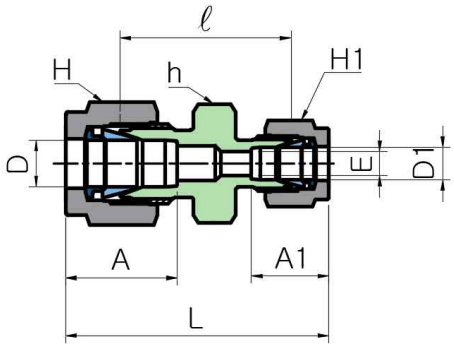

Connects Fractional(Inch) Tube

Part No.	Tube O.D. D		Tube O.D. D1		Dimensions (mm)										
					E Min.	h		H		H1		A	A1	ℓ	L
	inch	mm	inch	mm		inch	mm	inch	mm	inch	mm				
GRU 02-01	1/8	3.17	1/16	1.58	1.3	7/16	11.11	7/16	11.11	5/16	7.93	12.7	8.6	20.6	31.0
GRU 03-01	3/16	4.76	1/16	1.58	1.3	7/16	11.11	1/2	12.70	5/16	7.93	13.7	8.6	21.9	32.3
GRU 03-02	3/16	4.76	1/8	3.17	2.3	7/16	11.11	1/2	12.70	7/16	11.11	13.7	12.7	23.4	36.6
GRU 04-01	1/4	6.35	1/16	1.58	1.3	1/2	12.70	9/16	14.28	5/16	7.93	15.2	8.6	23.1	34.3
GRU 04-02	1/4	6.35	1/8	3.17	2.3	1/2	12.70	9/16	14.28	7/16	11.11	15.2	12.7	24.6	38.6
GRU 04-03	1/4	6.35	3/16	4.76	3.0	1/2	12.70	9/16	14.28	1/2	12.70	15.2	13.7	25.4	39.4
GRU 05-02	5/16	7.93	1/8	3.17	2.3	9/16	14.28	5/8	15.87	7/16	11.11	16.3	12.7	25.9	39.6
GRU 05-04	5/16	7.93	1/4	6.35	4.8	9/16	14.28	5/8	15.87	9/16	14.28	16.3	15.2	27.4	42.2
GRU 06-01	3/8	9.52	1/16	1.58	1.3	5/8	15.87	11/16	17.46	5/16	7.93	16.8	8.6	25.4	36.6
GRU 06-02	3/8	9.52	1/8	3.17	2.3	5/8	15.87	11/16	17.46	7/16	11.11	16.8	12.7	26.9	40.9
GRU 06-04	3/8	9.52	1/4	6.35	4.8	5/8	15.87	11/16	17.46	9/16	14.28	16.8	15.2	28.4	43.2
GRU 06-05	3/8	9.52	5/16	7.93	6.4	5/8	15.87	11/16	17.46	5/8	15.87	16.8	16.3	29.5	44.2
GRU 08-02	1/2	12.70	1/8	3.17	2.3	13/16	20.63	7/8	22.22	7/16	11.11	22.9	12.7	28.4	45.2
GRU 08-04	1/2	12.70	1/4	6.35	4.8	13/16	20.63	7/8	22.22	9/16	14.28	22.9	15.2	29.5	47.0
GRU 08-06	1/2	12.70	3/8	9.52	7.1	13/16	20.63	7/8	22.22	11/16	17.46	22.9	16.8	31.0	48.5
GRU 10-06	5/8	15.87	3/8	9.52	7.1	15/16	23.81	1	25.40	11/16	17.46	24.4	16.8	31.8	49.3
GRU 10-08	5/8	15.87	1/2	12.70	10.4	15/16	23.81	1	25.40	7/8	22.22	24.4	22.9	31.8	52.1
GRU 12-04	3/4	19.05	1/4	6.35	4.8	1-1/16	26.98	1-1/8	28.57	9/16	14.28	24.4	15.2	31.8	49.3
GRU 12-06	3/4	19.05	3/8	9.52	7.1	1-1/16	26.98	1-1/8	28.57	11/16	17.46	24.4	16.8	33.3	50.8
GRU 12-08	3/4	19.05	1/2	12.70	10.4	1-1/16	26.98	1-1/8	28.57	7/8	22.22	24.4	22.9	33.3	53.6
GRU 12-10	3/4	19.05	5/8	15.87	12.7	1-1/16	26.98	1-1/8	28.57	1	25.40	24.4	24.4	33.3	53.6
GRU 16-08	1	25.40	1/2	12.70	10.4	1-3/8	34.92	1-1/2	38.10	7/8	22.22	31.2	22.9	40.9	63.2
GRU 16-12	1	25.40	3/4	19.05	15.7	1-3/8	34.92	1-1/2	38.10	1-1/8	28.57	31.2	24.4	40.9	63.2

[Tube to Tube Union]

GRU
Reducing Union

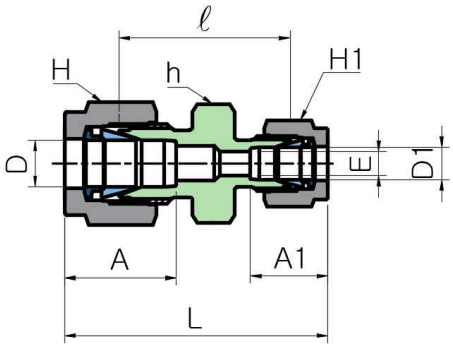

Connects Metric Tube

Part No.	Tube O.D. D	Tube O.D. D1	Dimensions (mm)							
			E Min.	h	H	H1	A	A1	ℓ	L
	mm	mm		mm	mm	mm				
GRU 06M-03M	6	3	2.4	12.70	14.28	11.11	15.3	12.9	24.6	38.6
GRU 06M-04M	6	4	2.4	12.70	14.28	12.70	15.3	13.7	25.4	39.4
GRU 08M-06M	8	6	4.8	14.28	15.87	14.28	16.2	15.3	27.4	42.3
GRU 10M-06M	10	6	4.8	17.46	19.05	14.28	17.2	15.3	29.5	44.5
GRU 12M-06M	12	6	4.8	20.63	22.22	14.28	22.8	15.3	29.5	47.0
GRU 12M-08M	12	8	6.4	20.63	22.22	15.87	22.8	16.2	30.2	47.8
GRU 12M-10M	12	10	7.9	20.63	22.22	19.05	22.8	17.2	31.0	48.7
GRU 16M-10M	16	10	7.9	23.81	25.40	19.05	24.4	17.2	31.8	49.5
GRU 16M-12M	16	12	9.5	23.81	25.40	22.22	24.4	22.8	31.8	52.0
GRU 18M-12M	18	12	9.5	26.98	30.16	22.22	24.4	22.8	33.3	53.5
GRU 25M-18M	25	18	15.1	34.92	38.10	30.16	31.3	24.4	38.6	61.0
GRU 25M-20M	25	20	15.9	34.92	38.10	31.75	31.3	26.0	39.9	62.3

Connects Metric Tube to Fractional(Inch) Tube

Part No.	Tube O.D. D	Tube O.D. D1		Dimensions (mm)									
				E Min.	h	H	H1		A	A1	ℓ	L
	mm	inch	mm		mm	mm	inch	mm				
GRU 04M-02	4	1/8	3.17	2.4	11.11	12.70	7/16	11.11	13.7	12.7	23.4	36.5
GRU 04M-04	4	1/4	6.35	2.4	12.70	12.70	9/16	14.28	13.7	15.2	25.4	39.4
GRU 06M-02	6	1/8	3.17	2.4	12.70	14.28	7/16	11.11	15.3	12.7	24.6	38.5
GRU 06M-04	6	1/4	6.35	4.8	12.70	14.28	9/16	14.28	15.3	15.2	26.2	41.0
GRU 06M-05	6	5/16	7.93	4.8	14.28	14.28	5/8	15.87	15.3	16.3	27.4	42.3
GRU 08M-04	8	1/4	6.35	4.8	14.28	15.87	9/16	14.28	16.2	15.2	27.4	42.3
GRU 10M-04	10	1/4	6.35	4.8	17.46	19.05	9/16	14.28	17.2	15.2	29.5	44.5
GRU 10M-06	10	3/8	9.52	7.1	17.46	19.05	11/16	17.46	17.2	16.8	31.0	45.9
GRU 12M-06	12	3/8	9.52	7.1	20.63	22.22	11/16	17.46	22.8	16.8	31.0	48.4
GRU 12M-08	12	1/2	12.70	9.5	20.63	22.22	7/8	22.22	22.8	22.9	31.0	51.2
GRU 15M-08	15	1/2	12.70	10.4	23.81	25.40	7/8	22.22	24.4	22.9	31.8	52.0

[Tube to Tube Union]

GBU
Bulkhead Union

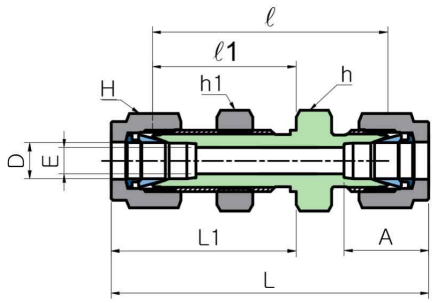

Connects Fractional(Inch) Tube

Part No.	Tube O.D. D		Dimensions (mm)											
			E Min.	h		H		A	ℓ	ℓ1	L	L1	Panel Hole Size	Max Panel Thickness
	inch	mm		inch	mm	inch	mm							
GBU 01	1/16	1.68	1.3	5/16	7.93	5/16	7.93	8.6	23.9	13.5	31.5	17.3	5.2	3.1
GBU 02	1/8	3.17	2.3	1/2	12.70	7/16	11.11	12.7	38.1	24.6	51.3	31.2	8.3	12.7
GBU 03	3/16	4.76	3.0	9/16	14.28	1/2	12.70	13.7	40.4	25.4	53.6	32.0	9.9	12.7
GBU 04	1/4	6.35	4.8	5/8	15.87	9/16	14.28	15.2	42.9	26.2	57.7	33.5	11.5	10.2
GBU 05	5/16	7.93	6.4	11/16	17.46	5/8	15.87	16.3	46.0	28.4	60.7	35.8	13.1	11.2
GBU 06	3/8	9.52	7.1	3/4	19.05	11/16	17.46	16.8	47.5	29.5	62.2	36.8	14.7	11.2
GBU 08	1/2	12.70	10.4	15/16	23.81	7/8	22.22	22.9	50.8	31.8	71.1	41.9	19.4	12.7
GBU 10	5/8	15.87	12.7	1-1/16	26.98	1	25.40	24.4	52.3	32.5	72.6	42.7	22.6	12.7
GBU 12	3/4	19.05	15.7	1-3/16	30.16	1-1/8	28.57	24.4	58.7	37.3	79.0	47.5	25.8	16.8
GBU 14	7/8	22.22	18.3	1-3/8	34.92	1-1/4	31.75	25.9	64.3	42.9	84.6	53.1	29.0	19.1
GBU 16	1	25.40	22.4	1-5/8	41.27	1-1/2	38.10	31.2	71.4	45.2	95.8	57.4	33.7	19.1
GBU 20	1-1/4	31.75	27.7	1-7/8	47.63	1-7/8	47.63	41.1	78.9	47.8	123.2	69.9	41.7	19.1
GBU 24	1-1/2	38.10	34.0	2-1/4	57.15	2-1/4	57.15	50.0	84.8	49.3	139.2	76.5	49.6	19.1
GBU 32	2	50.80	46.0	2-3/4	69.85	3	76.20	67.6	105.7	56.4	180.3	93.7	67.1	19.1

Connects Metric Tube

Part No.	Tube O.D. D	Dimensions (mm)									
		E Min.	h	H	A	ℓ	ℓ1	L	L1	Panel Hole Size	Max Panel Thickness
	mm		mm	mm							
GBU 03M	3	2.4	14.28	11.11	12.9	38.1	24.6	51.3	31.2	8.3	12.7
GBU 04M	4	2.4	14.28	12.7	13.7	40.4	25.4	53.6	32	9.9	12.7
GBU 06M	6	4.8	15.87	14.28	15.3	42.9	26.2	57.7	33.6	11.5	10.2
GBU 08M	8	6.4	17.46	15.87	16.2	46	28.6	61	36.1	13.1	11.2
GBU 10M	10	7.9	22.22	19.05	17.2	48.5	29.4	63.7	37	16.2	11.2
GBU 12M	12	9.5	23.81	22.22	22.8	50.8	31.8	71	41.9	19.5	12.7
GBU 14M	14	11.1	26.98	25.4	24.4	52.3	32.5	72.5	42.6	22.8	12.7
GBU 15M	15	11.9	26.98	25.4	24.4	52.3	32.5	72.5	42.6	22.8	12.7
GBU 16M	16	12.7	26.98	25.4	24.4	52.3	32.5	72.5	42.6	22.8	12.7
GBU 18M	18	15.1	30.16	30.16	24.4	58.7	37.3	78.9	47.4	26	16.8
GBU 20M	20	15.9	34.92	31.75	26	64.3	42.9	84.5	53	29	17
GBU 22M	22	18.3	34.92	31.75	26	64.3	42.9	84.5	53	29	19.1
GBU 25M	25	21.8	41.27	38.1	31.3	71.4	45.2	96	57.5	33.7	19.1
GBU 32M	32	28.6	50.8	50.8	42	82.3	49.5	128.3	72.5	42.5	19
GBU 38M	38	33.7	60.3	57.15	49.4	89.8	51.9	145	79.5	50.5	19

[Tube to Tube Union]

GUE
Union Elbow

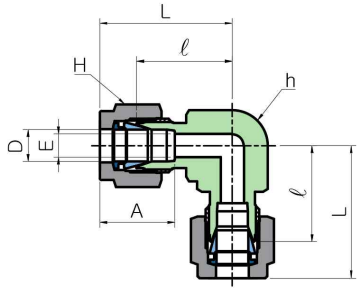

Connects Fractional(Inch) Tube

Part No.	Tube O.D. D		Dimensions (mm)							
			E Min.	h		H		A	ℓ	L
	inch	mm		inch	mm	inch	mm			
GUE 01	1/16	1.68	1.3	3/8	9.52	5/16	7.92	8.6	14.0	17.8
GUE 02	1/8	3.17	2.3	3/8	9.52	7/16	11.11	12.7	15.7	22.4
GUE 03	3/16	4.76	3.0	1/2	12.70	1/2	12.70	13.7	17.8	24.4
GUE 04	1/4	6.35	4.8	1/2	12.70	9/16	14.28	15.2	19.6	26.9
GUE 05	5/16	7.93	6.4	9/16	14.28	5/8	15.87	16.3	21.3	28.7
GUE 06	3/8	9.52	7.1	5/8	15.87	11/16	17.46	16.8	23.1	30.5
GUE 08	1/2	12.70	10.4	13/16	20.63	7/8	22.22	22.9	25.9	36.1
GUE 10	5/8	15.87	12.7	15/16	23.81	1	25.40	24.4	28.7	38.8
GUE 12	3/4	19.05	15.7	1-1/16	26.98	1-1/8	28.57	24.4	29.7	39.9
GUE 14	7/8	22.22	18.3	1-3/16	30.16	1-1/4	31.75	25.9	34.5	44.7
GUE 16	1	25.40	22.4	1-3/8	34.92	1-1/2	38.10	31.2	36.8	49.0
GUE 20	1-1/4	31.75	27.7	1-11/16	42.86	1-7/8	47.63	41.1	44.5	66.5
GUE 24	1-1/2	38.10	34.0	2	50.80	2-1/4	57.15	50.0	50.8	78.0
GUE 32	2	50.80	46.0	2-3/4	69.85	3	76.20	67.6	69.8	107.2

Connects Metric Tube

Part No.	Tube O.D. D	Dimensions (mm)					
		E Min.	h	H	A	ℓ	L
	mm		mm	mm			
GUE 03M	3	2.4	9.52	11.11	12.9	15.7	22.3
GUE 04M	4	2.4	12.70	12.70	13.7	18.8	25.4
GUE 06M	6	4.8	12.70	14.28	15.3	19.6	27.0
GUE 08M	8	6.4	14.28	15.87	16.2	21.3	28.8
GUE 10M	10	7.9	17.46	19.05	17.2	23.9	31.5
GUE 12M	12	9.5	20.63	22.22	22.8	25.9	36.0
GUE 14M	14	11.1	23.81	25.40	24.4	28.7	38.8
GUE 15M	15	11.9	23.81	25.40	24.4	28.7	38.8
GUE 16M	16	12.7	23.81	25.40	24.4	28.7	38.8
GUE 18M	18	15.1	26.98	30.16	24.4	29.7	39.8
GUE 20M	20	15.9	34.92	31.75	26.0	34.5	44.6
GUE 22M	22	18.3	34.92	31.75	26.0	34.5	44.6
GUE 25M	25	21.8	34.92	38.10	31.3	36.8	49.1
GUE 28M	28	21.8	42.86	47.63	36.6	43.2	64.0
GUE 30M	30	26.2	47.63	50.80	39.6	48.3	69.9
GUE 32M	32	28.6	47.63	50.80	42.0	49.3	72.3
GUE 38M	38	33.7	55.56	57.15	49.4	56.4	84.0

[Tube to Tube Union]

GUT
Union Tee

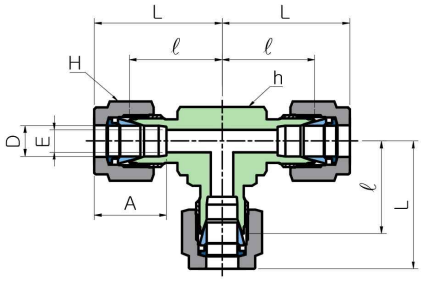

Connects Fractional(Inch) Tube

Part No.	Tube O.D. D		Dimensions (mm)							
			E Min.	h		H		A	ℓ	L
	inch	mm		inch	mm	inch	mm			
GUT 01	1/16	1.68	1.3	3/8	9.52	5/16	7.93	8.6	14.0	17.8
GUT 02	1/8	3.17	2.3	3/8	9.52	7/16	11.11	12.7	15.7	22.4
GUT 03	3/16	4.76	3.0	1/2	12.70	1/2	12.70	13.7	17.8	24.4
GUT 04	1/4	6.35	4.8	1/2	12.70	9/16	14.28	15.2	19.6	26.9
GUT 05	5/16	7.93	6.4	5/8	15.87	5/8	15.87	16.3	21.3	28.7
GUT 06	3/8	9.52	7.1	5/8	15.87	11/16	17.46	16.8	23.1	30.5
GUT 08	1/2	12.7	10.4	13/16	20.63	7/8	22.22	22.9	25.9	36.1
GUT 10	5/8	15.87	12.7	15/16	23.81	1	25.40	24.4	28.7	38.8
GUT 12	3/4	19.05	15.7	1-1/16	26.98	1-1/8	28.57	24.4	29.7	39.9
GUT 14	7/8	22.22	18.3	1-3/16	30.16	1-1/4	31.75	25.9	34.5	44.7
GUT 16	1	25.4	22.4	1-3/8	34.92	1-1/2	38.10	31.2	36.8	49.0
GUT 20	1-1/4	31.75	27.7	1-11/16	42.86	1-7/8	47.63	41.1	44.5	66.5
GUT 24	1-1/2	38.1	34.0	2	50.80	2-1/4	57.15	50.0	50.8	78.0
GUT 32	2	50.8	46.0	2-3/4	69.85	3	76.20	67.6	69.8	107.2

Connects Metric Tube

Part No.	Tube O.D. D	Dimensions (mm)					
		E Min.	h	H	A	ℓ	L
	mm		mm	mm			
GUT 03M	2	1.7	9.52	12.70	12.9	15.7	22.3
GUT 04M	3	2.4	9.52	11.11	12.9	15.7	22.3
GUT 06M	4	2.4	12.70	12.70	13.7	18.8	25.4
GUT 08M	6	4.8	12.70	14.28	15.3	19.6	27.0
GUT 10M	8	6.4	14.28	15.87	16.2	21.3	28.8
GUT 12M	10	7.9	17.46	19.05	17.2	23.9	31.5
GUT 14M	12	9.5	20.63	22.22	22.8	25.9	36.0
GUT 15M	14	11.1	23.81	25.40	24.4	28.7	38.8
GUT 16M	15	11.9	23.81	25.40	24.4	28.7	38.8
GUT 18M	16	12.7	23.81	25.40	24.4	28.7	38.8
GUT 20M	18	15.1	26.98	30.16	24.4	29.7	39.8
GUT 22M	20	15.9	34.92	31.75	26.0	34.5	44.6
GUT 25M	22	18.3	34.92	31.75	26.0	34.5	44.6
GUT 28M	25	21.8	34.92	38.10	31.3	36.8	49.1
GUT 30M	28	21.8	42.86	47.63	36.6	43.2	64.0
GUT 32M	30	26.2	47.63	50.80	39.6	48.3	69.9
GUT 38M	32	28.6	47.63	50.80	42.0	49.3	72.3

[Tube to Tube Union]

GRBT

Reducing Union Branch Tee

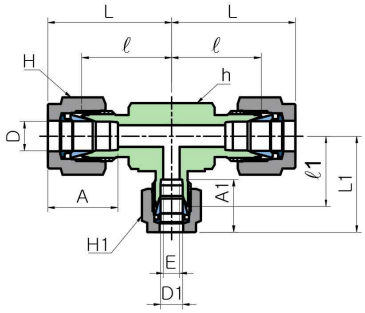

Connects Fractional(Inch) Tube

Part No.	Tube O.D. D		Tube O.D. D1		Dimensions (mm)													
					E Min.	h		H		H1		A	A1	ℓ	ℓ1	L	L1
	inch	mm	inch	mm		inch	mm	inch	mm	inch	mm						
GRBT 06-04	3/8	9.52	1/4	6.35	4.8	5/8	15.87	11/16	17.46	9/16	14.28	16.8	15.2	23.1	21.6	30.5	29.0
GRBT 08-04	1/2	12.7	1/4	6.35	4.8	13/16	20.63	7/8	22.22	9/16	14.28	22.9	15.2	25.9	24.4	36.1	31.8
GRBT 08-06	1/2	12.7	3/8	9.52	7.1	13/16	20.63	7/8	22.22	11/16	17.46	22.9	16.8	25.9	25.9	36.1	33.3
GRBT 10-06	5/8	15.87	3/8	9.52	7.1	15/16	23.81	1	25.40	11/16	17.46	24.4	16.8	28.7	28.7	38.9	36.1
GRBT 12-04	3/4	19.05	1/4	6.35	4.8	1-1/16	26.98	1-1/8	28.57	9/16	14.28	24.4	15.2	29.7	29.7	39.9	37.1
GRBT 12-06	3/4	19.05	3/8	9.52	7.1	1-1/16	26.98	1-1/8	28.57	11/16	17.46	24.4	16.8	29.7	29.7	39.9	37.1
GRBT 12-08	3/4	19.05	1/2	12.7	10.4	1-1/16	26.98	1-1/8	28.57	7/8	22.22	24.4	22.9	29.7	29.7	39.9	39.9
GRBT 16-04	1	25.4	1/4	6.35	4.8	1-3/8	34.92	1-1/2	38.10	9/16	14.28	31.2	15.2	36.8	33.0	49.0	40.4
GRBT 16-06	1	25.4	3/8	9.52	7.1	1-3/8	34.92	1-1/2	38.10	11/16	17.46	31.2	16.8	36.8	34.5	49.0	41.9
GRBT 16-08	1	25.4	1/2	12.7	10.4	1-3/8	34.92	1-1/2	38.10	7/8	22.22	31.2	22.9	36.8	34.5	49.0	44.7
GRBT 16-12	1	25.4	3/4	19.05	15.7	1-3/8	34.92	1-1/2	38.10	1-1/8	28.57	31.2	24.4	36.8	34.5	49.0	44.7
GRBT 24-16	1-1/2	38.1	1	25.4	22.4	2	50.8	2-1/4	57.15	1-1/2	38.10	50.0	31.2	50.8	47.8	78.7	59.9

Connects Metric Tube

Part No.	Tube O.D. D	Tube O.D. D1	Dimensions (mm)									
			E Min.	h	H	H1	A	A1	ℓ	ℓ1	L	L1
	mm	mm		mm	mm	mm						
GRBT 08M-06M	8	6	4.8	14.28	15.87	14.28	16.2	15.3	21.3	21.3	28.8	28.7
GRBT 10M-06M	10	6	4.8	17.46	19.05	14.28	17.2	15.3	23.9	22.3	31.5	29.7
GRBT 12M-06M	12	6	4.8	20.63	22.22	14.28	22.8	15.3	25.9	24.4	36.0	31.8
GRBT 16M-12M	16	12	9.5	26.98	25.40	22.22	24.4	22.8	28.7	28.7	38.8	38.8
GRBT 18M-12M	18	12	9.5	26.98	30.16	22.22	24.4	22.8	29.7	29.7	39.8	39.8
GRBT 22M-12M	22	12	9.5	34.92	31.75	22.22	26.0	22.8	34.5	34.5	44.6	44.6
GRBT 25M-12M	25	12	9.5	34.92	38.10	22.22	31.3	22.8	36.8	34.5	49.1	44.6

GRRT

Reducing Union Run Tee

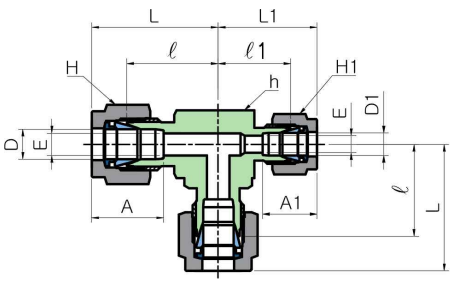

Connects Fractional(Inch) Tube

Part No.	Tube O.D. D		Tube O.D. D1		Dimensions (mm)													
					E Min.	h		H		H1		A	A1	ℓ	ℓ1	L	L1
	inch	mm	inch	mm		inch	mm	inch	mm	inch	mm						
GRRT 06-04	3/8	9.52	1/4	6.35	4.8	5/8	15.87	11/16	17.46	9/16	14.28	16.8	15.2	23.1	21.6	30.5	29.0
GRRT 08-04	1/2	12.7	1/4	6.35	4.8	13/16	20.63	7/8	22.22	9/16	14.28	22.9	15.2	25.9	24.4	36.1	31.8
GRRT 08-06	1/2	12.7	3/8	9.52	7.1	13/16	20.63	7/8	22.22	11/16	17.46	22.9	16.8	25.9	25.9	36.1	33.3
GRRT 10-06	5/8	15.87	3/8	9.52	7.1	1	25.40	1	25.40	11/16	17.46	24.4	16.8	28.7	28.7	38.9	36.1
GRRT 12-06	3/4	19.05	3/8	9.52	7.1	1-1/16	26.98	1-1/8	28.57	11/16	17.46	24.4	16.8	29.7	29.7	39.9	37.1
GRRT 12-08	3/4	19.05	1/2	12.7	10.4	1-1/16	26.98	1-1/8	28.57	7/8	22.22	24.4	22.9	29.7	29.7	39.9	39.9
GRRT 16-08	1	25.4	1/2	12.7	10.4	1-3/8	34.92	1-1/2	38.10	7/8	22.22	31.2	22.9	36.8	34.5	49.0	44.7
GRRT 16-12	1	25.4	3/4	19.05	15.7	1-3/8	34.92	1-1/2	38.10	1-1/8	28.57	31.2	24.4	36.8	34.5	49.0	44.7

[Tube to Tube Union]

GUC
Union Cross

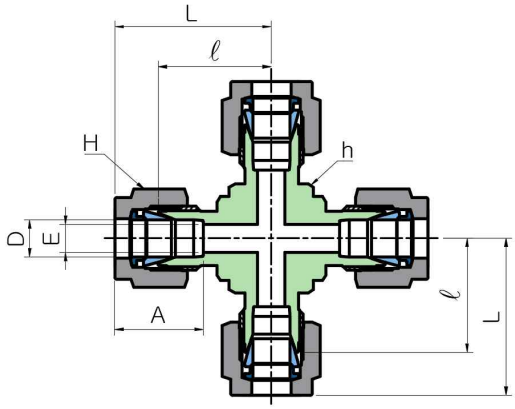

Connects Fractional(Inch) Tube

Part No.	Tube O.D. D		Dimensions (mm)							
			E Min.	h		H		A	ℓ	L
	inch	mm		inch	mm	inch	mm			
GUC 02	1/8	3.17	2.3	3/8	9.52	7/16	11.11	12.7	15.7	22.4
GUC 03	3/16	4.76	3.0	1/2	12.70	1/2	12.70	13.7	17.8	24.4
GUC 04	1/4	6.35	4.8	1/2	12.70	9/16	14.28	15.2	19.6	26.9
GUC 05	5/16	7.93	6.4	5/8	15.87	5/8	15.87	16.3	21.3	28.7
GUC 06	3/8	9.52	7.1	5/8	15.87	11/16	17.46	16.8	23.1	30.5
GUC 08	1/2	12.7	10.4	13/16	20.63	7/8	22.22	22.9	25.9	36.1
GUC 10	5/8	15.87	15.9	1-1/16	26.98	1	25.40	24.4	28.7	38.8
GUC 12	3/4	19.05	12.7	1-1/16	26.98	1-1/8	28.57	24.4	29.7	39.9
GUC 14	7/8	22.22	18.3	1-3/8	34.92	1-1/4	31.75	25.9	34.5	44.7
GUC 16	1	25.4	22.4	1-3/8	34.92	1-1/2	38.10	31.2	36.8	49.0

Connects Metric Tube

Part No.	Tube O.D. D	Dimensions (mm)					
		E Min.	h	H	A	ℓ	L
	mm		mm	mm			
GUC 03M	3	2.4	9.52	11.11	12.9	15.7	22.3
GUC 06M	6	4.8	12.70	14.28	15.3	19.6	27.0
GUC 08M	8	6.4	15.87	15.87	16.2	21.3	28.8
GUC 10M	10	7.9	17.46	19.05	17.2	23.9	31.5
GUC 12M	12	9.5	20.63	22.22	22.8	25.9	36.0
GUC 16M	16	12.7	26.98	25.40	24.4	28.7	38.8
GUC 18M	18	15.1	26.98	30.16	24.4	29.7	39.8
GUC 20M	20	15.9	34.92	31.75	26.0	34.5	44.6
GUC 22M	22	18.3	34.92	31.75	26.0	34.5	44.6
GUC 25M	25	21.8	34.92	38.10	31.3	36.8	49.1

[Stub Tube Connector]

GR
Reducer

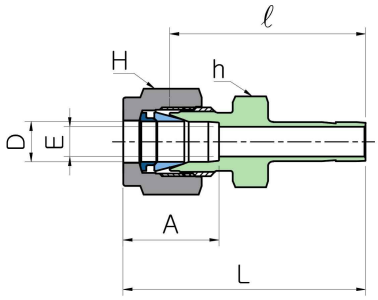

Connects Fractional(Inch) Tube to Fractional SG-LOK port

Part No.	Tube O.D. D		Tube O.D. D1		Dimensions (mm)							
					E Min.	h		H		A	ℓ	L
	inch	mm	inch	mm		inch	mm	inch	mm			
GR 02-02T	1/8	3.17	1/8	3.17	2.0	7/16	11.11	7/16	11.11	12.7	26.9	33.5
GR 02-03T	1/8	3.17	3/16	4.76	2.3	7/16	11.11	7/16	11.11	12.7	27.7	34.3
GR 02-04T	1/8	3.17	1/4	6.35	2.3	7/16	11.11	7/16	11.11	12.7	29.5	36.1
GR 02-06T	1/8	3.17	3/8	9.52	2.3	7/16	11.11	7/16	11.11	12.7	31.0	37.6
GR 02-08T	1/8	3.17	1/2	12.70	2.3	9/16	14.28	7/16	11.11	12.7	37.6	44.2
GR 03-02T	3/16	4.76	1/8	3.17	2.0	7/16	11.11	1/2	12.70	13.7	28.2	34.8
GR 03-04T	3/16	4.76	1/4	6.35	3.0	7/16	11.11	1/2	12.70	13.7	30.5	37.1
GR 04-02T	1/4	6.35	1/8	3.17	2.0	1/2	12.70	9/16	14.28	15.2	29.5	36.8
GR 04-03T	1/4	6.35	3/16	4.76	3.0	1/2	12.70	9/16	14.28	15.2	30.2	37.6
GR 04-04T	1/4	6.35	1/4	6.35	4.3	1/2	12.70	9/16	14.28	15.2	31.8	39.1
GR 04-05T	1/4	6.35	5/16	7.93	4.8	1/2	12.70	9/16	14.28	15.2	32.5	39.9
GR 04-06T	1/4	6.35	3/8	9.52	4.8	1/2	12.70	9/16	14.28	15.2	33.3	40.6
GR 04-08T	1/4	6.35	1/2	12.70	4.8	9/16	14.28	9/16	14.28	15.2	38.9	46.2
GR 04-10T	1/4	6.35	5/8	15.87	4.8	11/16	17.46	9/16	14.28	15.2	40.6	48.0
GR 04-12T	1/4	6.35	3/4	19.05	4.8	13/16	20.63	9/16	14.28	15.2	40.4	47.8
GR 05-06T	5/16	7.93	3/8	9.52	6.4	9/16	14.28	5/8	15.87	16.3	34.5	41.9
GR 05-08T	5/16	7.93	1/2	12.70	6.4	9/16	14.28	5/8	15.87	16.3	40.1	47.5
GR 06-04T	3/8	9.52	1/4	6.35	4.3	5/8	15.87	11/16	17.46	16.8	34.0	41.4
GR 06-06T	3/8	9.52	3/8	9.52	6.9	5/8	15.87	11/16	17.46	16.8	35.8	43.2
GR 06-08T	3/8	9.52	1/2	12.70	7.1	5/8	15.87	11/16	17.46	16.8	41.1	48.5
GR 06-10T	3/8	9.52	5/8	15.87	7.1	11/16	17.46	11/16	17.46	16.8	42.9	50.3
GR 06-12T	3/8	9.52	3/4	19.05	7.1	13/16	20.63	11/16	17.46	16.8	42.9	50.3
GR 08-04T	1/2	12.70	1/4	6.35	4.3	13/16	20.63	7/8	22.22	22.9	34.8	45.0
GR 08-06T	1/2	12.70	3/8	9.52	6.9	13/16	20.63	7/8	22.22	22.9	36.6	46.7
GR 08-08T	1/2	12.70	1/2	12.70	9.4	13/16	20.63	7/8	22.22	22.9	42.2	52.3
GR 08-10T	1/2	12.70	5/8	15.87	10.4	13/16	20.63	7/8	22.22	22.9	43.7	53.8
GR 08-12T	1/2	12.70	3/4	19.05	10.4	13/16	20.63	7/8	22.22	22.9	43.7	53.8
GR 08-16T	1/2	12.70	1	25.40	10.4	1-1/16	26.98	7/8	22.22	22.9	50.0	60.2
GR 10-12T	5/8	15.87	3/4	19.05	12.7	15/16	23.81	1	25.40	24.4	44.5	54.6
GR 10-14T	5/8	15.87	7/8	22.22	12.7	15/16	23.81	1	25.40	24.4	46.0	56.1
GR 10-16T	5/8	15.87	1	25.40	12.7	1-1/16	26.98	1	25.40	24.4	50.8	61.0
GR 12-08T	3/4	19.05	1/2	12.70	9.4	1-1/16	26.98	1-1/8	28.57	24.4	44.5	54.6
GR 12-16T	3/4	19.05	1	25.40	15.7	1-1/16	26.98	1-1/8	28.57	24.4	52.3	62.5
GR 16-20T	1	25.40	1-1/4	31.75	22.4	1-3/8	34.92	1-1/2	38.10	31.2	68.3	80.5
GR 16-24T	1	25.40	1-1/2	38.10	22.4	1-5/8	41.27	1-1/2	38.10	31.2	77.0	89.2
GR 20-24T	1-1/4	31.75	1-1/2	38.10	27.7	1-7/8	47.63	1-7/8	47.63	41.1	82.0	104.1
GR 20-32T	1-1/4	31.75	2	50.80	27.7	1-7/8	47.63	1-7/8	47.63	41.1	103.1	125.2
GR 24-32T	1-1/2	38.10	2	50.80	34.0	2-1/4	57.15	2-1/4	57.15	50.0	104.1	131.3

[Stub Tube Connector]

GR
Reducer

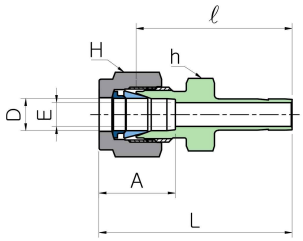

Connects Metric Tube to Metric SG-LOK port

Part No.	Tube O.D. D	Tube O.D. D1	Dimensions (mm)					
			E Min.	h	H	A	ℓ	L
	mm	mm		mm	mm			
GR 03M-04MT	3	4	2.4	11.11	11.11	12.9	28.4	35
GR 03M-06MT	3	6	2.4	11.11	11.11	12.9	29.5	36.1
GR 06M-08MT	6	8	4.8	14.28	14.28	15.3	32.5	39.9
GR 06M-10MT	6	10	4.8	14.28	14.28	15.3	33.3	40.7
GR 06M-12MT	6	12	4.8	14.28	14.28	15.3	38.9	46.3
GR 08M-06MT	8	6	4.1	15.87	15.87	16.2	32.8	40.3
GR 08M-10MT	8	10	6.4	14.28	15.87	16.2	34.5	42
GR 08M-12MT	8	12	6.4	15.87	15.87	16.2	40.1	47.6
GR 10M-06MT	10	6	4.1	17.46	19.05	17.2	34.8	42.4
GR 10M-12MT	10	12	7.9	17.46	19.05	17.2	42.2	49.8
GR 12M-06MT	12	6	4.1	22.22	22.22	22.8	34.8	44.9
GR 12M-10MT	12	10	7.1	22.22	22.22	22.8	36.6	46.7
GR 12M-16MT	12	16	9.5	22.22	22.22	22.8	43.7	53.8
GR 12M-18MT	12	18	9.5	22.22	22.22	22.8	43.7	53.8
GR 16M-12MT	16	12	8.8	23.81	25.4	24.4	42.9	53
GR 18M-12MT	18	12	8.8	26.98	30.16	24.4	44.5	54.6
GR 18M-16MT	18	16	12	26.98	30.16	24.4	46	56.1
GR 20M-16MT	20	16	12	30.16	31.75	26	47.8	57.9
GR 20M-18MT	20	18	13.9	30.16	31.75	26	47.8	57.9
GR 22M-20MT	22	20	15.5	30.16	31.75	26	49.3	59.4
GR 22M-25MT	22	25	18.3	30.16	31.75	26	54.1	64.2
GR 25M-18MT	25	18	13.9	34.92	38.1	31.3	50.8	63.1
GR 25M-20MT	25	20	15.5	34.92	38.1	31.3	52.3	64.6

Connects Metric Tube to Fractional(Inch) SG-LOK port

Part No.	Tube O.D. D	Tube O.D. D1		Dimensions (mm)						
				E Min.	h	H		A	ℓ	L
	mm	inch	mm		mm	inch	mm			
GR 03M-02T	3	1/8	3.17	2	12.7	1/2	12.7	12.9	26.9	33.5
GR 03M-04T	3	1/4	6.35	2.4	12.7	1/2	12.7	12.9	29.5	36.1
GR 06M-04T	6	1/4	6.35	4.3	12.7	9/16	14.28	15.3	31.8	39.2
GR 06M-05T	6	5/16	7.93	4.8	14.28	9/16	14.28	15.3	32.5	39.9
GR 06M-06T	6	3/8	9.52	4.8	14.28	9/16	14.28	15.3	33.3	40.7
GR 06M-08T	6	1/2	12.7	4.8	14.28	9/16	14.28	15.3	38.9	46.3
GR 08M-06T	8	3/8	9.52	6.4	14.28	5/8	15.87	16.2	34.5	42
GR 08M-08T	8	1/2	12.7	6.4	15.87	5/8	15.87	16.2	40.1	47.6
GR 10M-06T	10	3/8	9.52	6.9	17.46	3/4	19.05	17.2	36.6	44.2
GR 10M-08T	10	1/2	12.7	7.9	17.46	3/4	19.05	17.2	42.2	49.8
GR 12M-08T	12	1/2	12.7	9.4	20.63	7/8	22.22	22.8	42.2	52.3
GR 12M-12T	12	3/4	19.05	9.5	20.63	7/8	22.22	22.8	43.7	53.8
GR 18M-12T	18	3/4	19.05	14.7	26.98	1-3/16	30.16	24.4	46	56.1
GR 18M-16T	18	1	25.4	15.1	26.98	1-3/16	30.16	24.4	52.3	62.4

[Stub Tube Connector]

GBR
Bulkhead Reducer

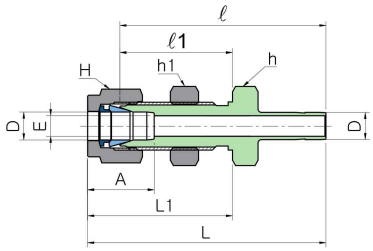

Connects Fractional(Inch) Tube to Fractional SG-LOK Port

Part No.	Tube O.D. D		Dimensions (mm)											
			E Min.	h		H		A	ℓ	ℓ1	L	L1	Panel Hole Size	Max Panel Thickness
	inch	mm		inch	mm	inch	mm							
GBR 02-02T	1/8	3.17	2.0	1/2	12.70	7/16	11.11	12.7	42.9	24.6	49.5	31.2	8.3	12.7
GBR 04-04T	1/4	6.35	4.3	5/8	15.87	9/16	14.28	15.2	48.5	26.2	55.9	33.5	11.5	10.2
GBR 06-06T	3/8	9.52	6.9	3/4	19.05	11/16	17.46	16.8	53.8	29.5	61.2	36.8	14.7	11.2
GBR 08-08T	1/2	12.70	9.4	15/16	23.81	7/8	22.22	22.9	62.7	31.8	72.9	41.9	19.4	12.7

Connects Metric Tube to Metric SG-LOK Port

Part No.	Tube O.D. D	Dimensions (mm)									
		E Min.	h	H	A	ℓ	ℓ1	L	L1	Panel Hole Size	Max Panel Thickness
	mm		mm	mm							
GBR 03M-03MT	3	1.9	12.70	11.11	12.9	43.0	24.6	49.6	31.2	8.3	12.7
GBR 06M-06MT	6	4.1	15.87	14.28	15.3	48.5	26.2	55.9	33.6	11.5	10.2
GBR 08M-08MT	8	5.6	17.46	15.87	16.2	53.1	28.6	60.6	36.1	13.1	11.2
GBR 12M-12MT	12	8.8	23.81	22.22	22.8	62.7	31.8	72.8	41.9	19.5	12.7

GER
Elbow Reducer

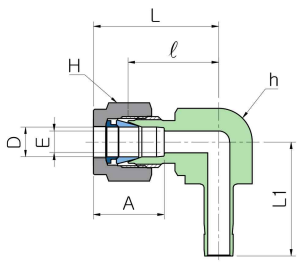

Connects Fractional(Inch) Tube to Fractional SG-LOK Port

Part No.	Tube O.D. D		Dimensions (mm)								
			E Min.	h		H		A	ℓ	L	L1
	inch	mm		inch	mm	inch	mm				
GER 02-02T	1/8	3.17	2.0	3/8	9.52	7/16	11.11	12.7	15.7	22.3	20.6
GER 04-04T	1/4	6.35	4.3	1/2	12.70	9/16	14.28	15.2	19.6	27.0	25.0
GER 06-06T	3/8	9.52	6.9	5/8	15.87	11/16	17.46	16.8	23.1	30.5	29.3
GER 08-08T	1/2	12.70	9.4	13/16	20.63	7/8	22.22	22.9	25.9	36.0	37.1

Connects Metric Tube to Metric SG-LOK Port

Part No.	Tube O.D. D	Dimensions (mm)						
		E Min.	h	H	A	ℓ	L	L1
	mm		mm	mm				
GER 03M-03MT	3	1.9	9.52	12.70	12.9	15.7	22.3	20.5
GER 06M-06MT	6	4.1	12.70	14.28	15.3	19.6	27.0	25.6
GER 08M-08MT	8	5.6	15.87	15.87	16.2	22.4	29.9	28.6
GER 10M-10MT	10	7.1	17.46	19.05	17.2	23.1	30.7	27.5
GER 12M-12MT	12	8.8	20.63	22.22	22.8	25.9	36.0	37.3

[Stub Tube Connector]

GMA
Male Adapter

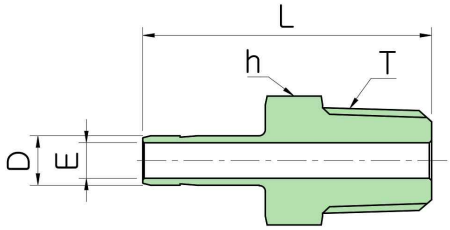

Connects Fractional(Inch) SG-LOK Port to Female NPT Thread

Part No.	Tube O.D. D		T (NPT)	Dimensions (mm)			
				E Min.	h		L
	inch	mm			inch	mm	
GMA 02T-02N	1/8	3.17	1/8	2.0	7/16	11.11	29.5
GMA 03T-02N	3/16	4.76	1/8	3.0	7/16	11.11	30.2
GMA 04T-02N	1/4	6.35	1/8	4.3	7/16	11.11	31.8
GMA 04T-04N	1/4	6.35	1/4	4.3	9/16	14.28	37.1
GMA 05T-02N	5/16	7.93	1/8	4.8	7/16	11.11	32.8
GMA 05T-04N	5/16	7.93	1/4	5.6	9/16	14.28	38.1
GMA 06T-04N	3/8	9.52	1/4	6.9	9/16	14.28	38.9
GMA 06T-06N	3/8	9.52	3/8	6.9	11/16	17.46	39.6
GMA 06T-08N	3/8	9.52	1/2	6.9	7/8	22.22	45.2
GMA 08T-04N	1/2	12.70	1/4	7.1	9/16	14.28	44.5
GMA 08T-06N	1/2	12.70	3/8	9.4	11/16	17.46	45.2
GMA 08T-08N	1/2	12.70	1/2	9.4	7/8	22.22	50.5
GMA 10T-08N	5/8	15.87	1/2	11.9	7/8	22.22	52.3
GMA 12T-12N	3/4	19.05	3/4	14.7	1-1/16	26.98	52.3
GMA 14T-12N	7/8	22.22	3/4	15.7	1-1/16	26.98	54.3
GMA 16T-16N	1	25.40	1	20.3	1-3/8	34.92	66.0
GMA 20T-20N	1-1/4	31.75	1-1/4	25.9	1-3/4	44.45	80.3
GMA 24T-24N	1-1/2	38.10	1-1/2	31.8	2-1/8	53.98	94.5
GMA 32T-32N	2	50.80	2	43.7	2-3/4	69.85	119.4

ISO Tapered threads are available for all fractional GMA. To order, add “R” as a suffix instead of “N”

Connects Metric SG-LOK Port to Female ISO Tapered Thread

Part No.	Tube O.D. D	T (PT)	Dimensions (mm)		
			E Min.	h	L
	mm			mm	
GMA 03MT-02R	3	1/8	1.9	12.70	29.4
GMA 06MT-02R	6	1/8	4.1	11.11	32.8
GMA 06MT-04R	6	1/4	4.1	14.28	38.1
GMA 08MT-04R	8	1/4	5.6	14.28	39.1
GMA 10MT-04R	10	1/4	7.1	14.28	39.9
GMA 10MT-06R	10	3/8	7.1	17.46	40.6
GMA 10MT-08R	10	1/2	7.1	22.22	45.2
GMA 12MT-04R	12	1/4	7.1	14.28	46.5
GMA 12MT-06R	12	3/8	8.8	17.46	46.2
GMA 12MT-08R	12	1/2	8.8	22.22	52.0
GMA 18MT-08R	18	1/2	11.9	22.22	53.2
GMA 18MT-12R	18	3/4	13.9	26.98	53.2
GMA 20MT-12R	20	3/4	15.5	26.98	58.0
GMA 25MT-16R	25	1	19.5	34.92	70.7
GMA 28MT-16R	28	1	22.2	34.92	74.7
GMA 28MT-20R	28	1-1/4	22.5	46.04	76.2
GMA 30MT-20R	30	1-1/4	24.3	46.04	80.0
GMA 32MT-20R	32	1-1/4	26.5	46.04	81.0
GMA 38MT-24R	38	1-1/2	31.6	55.56	92.2

NPT threads are available for all metric GMA. To order, add “N” as a suffix instead of “R”.

[Stub Tube Connector]

GFA
Female Adapter

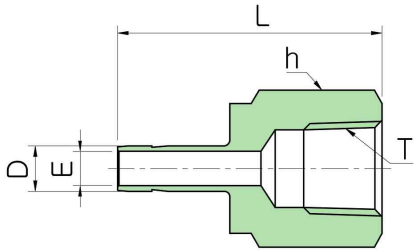

Connects Fractional(Inch) SG-LOK Port to Male NPT Thread

Part No.	Tube O.D. D		T (NPT)	Dimensions (mm)			
				E Min.	h		L
	inch	mm			inch	mm	
GFA 02T-02N	1/8	3.17	1/8	2.0	9/16	14.28	31.5
GFA 02T-04N	1/8	3.17	1/4	2.0	3/4	19.05	35.3
GFA 03T-02N	3/16	4.76	1/8	3.0	9/16	14.28	32.0
GFA 03T-04N	3/16	4.76	1/4	3.0	3/4	19.05	35.8
GFA 04T-02N	1/4	6.35	1/8	4.3	9/16	14.28	33.0
GFA 04T-04N	1/4	6.35	1/4	4.3	3/4	19.05	37.1
GFA 04T-06N	1/4	6.35	3/8	4.3	7/8	22.22	39.4
GFA 04T-08N	1/4	6.35	1/2	4.3	1-1/16	26.98	45.5
GFA 05T-02N	5/16	7.93	1/8	5.6	9/16	14.28	34.3
GFA 05T-04N	5/16	7.93	1/4	5.6	3/4	19.05	37.6
GFA 06T-02N	3/8	9.52	1/8	6.9	9/16	14.28	34.3
GFA 06T-04N	3/8	9.52	1/4	6.9	3/4	19.05	38.1
GFA 06T-06N	3/8	9.52	3/8	6.9	7/8	22.22	40.4
GFA 06T-08N	3/8	9.52	1/2	6.9	1-1/16	26.98	46.7
GFA 08T-04N	1/2	12.70	1/4	9.4	3/4	19.05	43.4
GFA 08T-06N	1/2	12.70	3/8	9.4	7/8	22.22	45.5
GFA 08T-08N	1/2	12.70	1/2	9.4	1-1/16	26.98	51.8
GFA 10T-06N	5/8	15.87	3/8	11.9	7/8	22.22	48.3
GFA 10T-08N	5/8	15.87	1/2	11.9	1-1/16	26.98	53.1
GFA 10T-12N	5/8	15.87	3/4	11.9	1-1/4	31.75	55.4
GFA 12T-08N	3/4	19.05	1/2	14.7	1-1/16	26.98	52.8
GFA 12T-12N	3/4	19.05	3/4	14.7	1-1/4	31.75	54.9
GFA 12T-16N	3/4	19.05	1	14.7	1-5/8	41.27	58.4
GFA 14T-12N	7/8	22.22	3/4	15.7	1-1/4	31.75	57.2
GFA 16T-12N	1	25.40	3/4	20.3	1-1/4	31.75	60.7
GFA 16T-16N	1	25.40	1	20.3	1-5/8	41.27	64.3
GFA 20T-20N	1-1/4	31.75	1-1/4	25.9	2-1/8	53.98	77.7
GFA 24T-24N	1-1/2	38.10	1-1/2	31.8	2-3/8	60.33	88.9
GFA 32T-32N	2	50.80	2	43.7	2-7/8	73.03	107.4

ISO Tapered threads are available for all fractional GFA. To order, add “R” as a suffix instead of “N”

Connects Metric SG-LOK Port to Male ISO Tapered Thread

Part No.	Tube O.D. D	T (PT)	Dimensions (mm)		
			E Min.	h	L
	mm			mm	
GFA 03MT-02R	3	1/8	1.9	14.28	31.2
GFA 06MT-02R	6	1/8	4.1	14.28	32.5
GFA 06MT-04R	6	1/4	4.1	19.05	37.1
GFA 08MT-04R	8	1/4	5.6	19.05	37.6
GFA 10MT-04R	10	1/4	7.1	19.05	38.1
GFA 10MT-06R	10	3/8	7.1	22.22	40.1
GFA 10MT-08R	10	1/2	7.1	26.98	46.5
GFA 12MT-04R	12	1/4	8.8	19.05	43.7
GFA 12MT-06R	12	3/8	8.8	22.22	46.0
GFA 12MT-08R	12	1/2	8.8	26.98	52.3
GFA 18MT-12R	18	3/4	13.9	34.92	54.8

NPT threads are available for all metric GFA. To order, add “N” as a suffix instead of “R”.

[Stub Tube Connector]

GPC
Port Connector

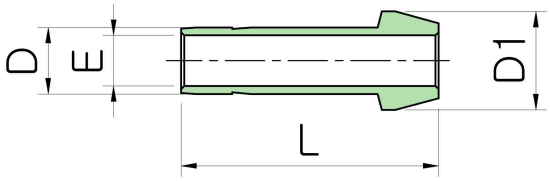

Connects Fractional(Inch) SG-LOK Port

Part No.	Tube O.D. D		Dimensions (mm)			
	inch	mm	E Min.	D1	ℓ	L
GPC 01	1/16	1.59	1.0	3.30	10.66	13.72
GPC 02	1/8	3.17	1.8	6.09	15.75	22.35
GPC 04	1/4	6.35	4.8	9.39	16.79	24.64
GPC 05	5/16	7.93	6.4	10.92	20.06	25.90
GPC 06	3/8	9.52	7.0	12.70	20.32	26.16
GPC 08	1/2	12.70	10.0	15.74	25.90	35.81
GPC 12	3/4	19.05	15.0	22.09	27.68	37.33
GPC 16	1	25.40	20.0	28.44	34.54	48.00

Connects Metric SG-LOK Port

Part No.	Tube O.D. D	Dimensions (mm)			
	mm	E Min.	D1	ℓ	L
GPC 03M	3	2.0	6.0	15.70	22.20
GPC 04M	4	2.0	7.0	16.67	23.81
GPC 06M	6	4.8	9.0	18.70	24.60
GPC 08M	8	6.4	11.0	20.00	25.90
GPC 10M	10	8.0	13.1	20.20	26.10
GPC 12M	12	9.0	15.0	26.00	35.80
GPC 15M	15	12.0	19.0	27.78	37.40
GPC 16M	16	12.0	19.0	27.80	37.40
GPC 18M	18	14.0	21.0	27.91	37.40
GPC 20M	20	15.0	23.0	29.20	38.90
GPC 22M	22	18.0	25.0	29.30	39.20
GPC 25M	25	20.0	28.0	34.50	48.00
GPC 28M	28	24.0	34.3	48.30	63.50
GPC 32M	32	27.0	39.5	52.40	69.70
GPC 38M	38	33.0	47.1	61.40	81.90

[Stub Tube Connector]

GRPC

Reducing Port Connector

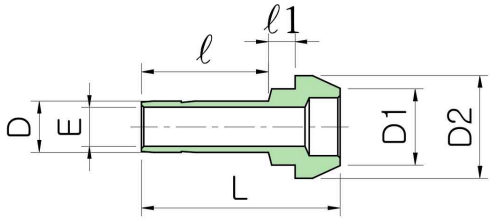

Connects Fractional(Inch) SG-LOK Port

Part No.	Tube O.D. D1		Reduced Tube O.D. D		Dimensions (mm)				
	inch	mm	inch	mm	E Min.	D2	ℓ	ℓ1	L
GRPC 02-01	1/8	3.17	1/16	1.59	1.0	6.1	8.64	2.03	17.27
GRPC 04-02	1/4	6.35	1/8	3.17	2.3	9.4	13.45	3.30	22.60
GRPC 06-02	3/8	9.52	1/8	3.17	2.3	12.7	13.45	3.81	23.11
GRPC 06-04	3/8	9.52	1/4	6.35	4.8	12.7	15.75	3.30	24.89
GRPC 08-04	1/2	12.70	1/4	6.35	4.8	15.7	15.75	3.81	29.21
GRPC 08-06	1/2	12.70	3/8	9.52	7.0	15.7	17.67	3.30	30.48
GRPC 12-08	3/4	19.05	1/2	12.70	10.0	22.1	23.20	3.81	37.65
GRPC 16-08	1	25.40	1/2	12.70	10.0	28.4	24.47	4.82	42.67
GRPC 16-12	1	25.40	3/4	19.05	15.0	28.4	25.90	4.06	43.43

Connects Metric SG-LOK Port

Part No.	Tube O.D. D1	Reduced Tube O.D. D	Dimensions (mm)				
	mm	mm	E Min.	D2	ℓ	ℓ1	L
GRPC 06M-03M	6	3	2.3	9.0	13.50	3.2	22.60
GRPC 08M-06M	8	6	4.8	11.0	15.70	3.1	24.70
GRPC 10M-06M	10	6	4.8	13.1	15.70	3.4	25.00
GRPC 10M-08M	10	8	6.4	13.1	16.80	3.1	26.00
GRPC 12M-06M	12	6	4.8	15.0	15.70	3.6	29.10
GRPC 12M-08M	12	8	6.4	15.0	16.80	3.4	29.80
GRPC 12M-10M	12	10	8.0	15.0	17.50	3.1	30.40
GRPC 16M-06M	16	6	4.8	19.0	15.70	3.6	30.40
GRPC 16M-12M	16	12	9.0	19.0	23.10	3.4	36.20
GRPC 28M-25M	28	25	20.0	34.4	33.00	8.2	56.50
GRPC 32M-25M	32	25	20.0	39.5	33.00	9.9	60.30
GRPC 38M-25M	38	25	20.0	47.1	33.00	12.3	65.80

[Tube To AN Tube]

GAU

AN Union

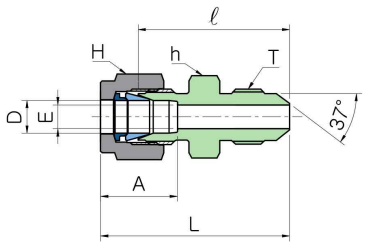

Connects Fractional(Inch) Tube to AN Flared Tube

Part No.	Tube O.D. D		AN Tube Flare Size		Straight Thread T	Dimensions (mm)							
						E Min.	h		H		A	ℓ	L
	inch	mm	inch	mm			inch	mm	inch	mm			
GAU 02-02U	1/8	3.17	1/8	3.17	5/16-24	1.5	7/16	11.11	7/16	11.11	12.7	24.9	31.5
GAU 02-04U	1/8	3.17	1/4	6.35	7/16-20	2.3	1/2	12.70	7/16	11.11	12.7	28.4	35.1
GAU 04-04U	1/4	6.35	1/4	6.35	7/16-20	4.3	1/2	12.70	9/16	14.28	15.2	30.2	37.6
GAU 05-05U	5/16	7.93	5/16	7.93	1/2-20	5.8	9/16	14.28	5/8	15.87	16.3	31.0	38.4
GAU 06-04U	3/8	9.52	1/4	6.35	7/16-20	4.3	5/8	15.87	11/16	17.46	16.8	32.3	39.6
GAU 06-06U	3/8	9.52	3/8	9.52	9/16-18	7.1	5/8	15.87	11/16	17.46	16.8	32.3	39.6
GAU 08-08U	1/2	12.70	1/2	12.70	3/4-16	9.9	13/16	20.63	7/8	22.22	22.9	35.8	46.0
GAU 12-12U	3/4	19.05	3/4	19.05	1-1/16-12	15.5	1-1/8	28.57	1-1/8	28.57	24.4	43.2	53.3
GAU 16-16U	1	25.40	1	25.40	1-5/16/12	21.3	1-3/8	34.92	1-1/2	38.10	31.2	49.3	61.5

GABU

AN Bulkhead Union

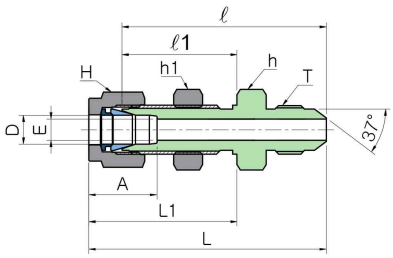

Connects Fractional(Inch) Tube to AN Flared Tube

Part No.	Tube O.D. D		AN Tube Flare Size		Straight Thread T	Dimensions (mm)											
						E Min.	h		H		A	ℓ	ℓ1	L	L1	Panel Hole Size	Max Panel Thickness
	inch	mm	inch	mm			inch	mm	inch	mm							
GABU 04-04U	1/4	6.35	1/4	6.35	7/16-20	4.3	5/8	15.87	9/16	14.28	15.2	46.5	26.2	53.8	33.5	11.5	10.2
GABU 06-06U	3/8	9.52	3/8	9.52	9/16-18	7.1	3/4	19.05	11/16	17.46	16.8	49.8	29.5	57.2	36.8	14.7	11.2
GABU 08-08U	1/2	12.70	1/2	12.70	3/4-16	9.9	15/16	23.81	7/8	22.22	22.9	55.6	31.8	65.8	41.9	19.4	12.7
GABU 12-12U	3/4	19.05	3/4	19.05	1-1/16-12	15.5	1-3/16	30.16	1-1/8	28.57	24.4	68.8	37.3	79.0	47.5	25.8	16.8
GABU 16-16U	1	25.40	1	25.40	1-5/16-12	21.3	1-5/8	41.27	1-1/2	38.10	31.2	80.3	45.2	92.5	57.4	33.7	19.1

GAA

AN Adapter

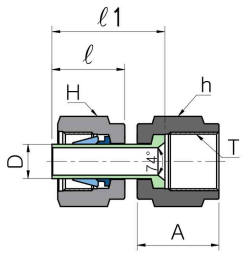

Connects Fractional(Inch) Tube to AN Flared Tube

Part No.	Tube O.D. D		AN Tube Flare Size		Straight Thread T	Dimensions (mm)						
						h		H		A	ℓ	ℓ1
	inch	mm	inch	mm		inch	mm	inch	mm			
GAA 02-01U	1/8	3.17	1/8	3.17	5/16-24	3/8	9.52	7/16	11.11	13.7	13.5	18.5
GAA 02-04U	1/8	3.17	1/4	6.35	7/16-20	9/16	14.28	7/16	11.11	15.7	13.5	19.1
GAA 04-04U	1/4	6.35	1/4	6.35	7/16-20	9/16	14.28	9/16	14.28	15.7	15.7	21.3
GAA 06-06U	3/8	9.52	3/8	9.52	9/16-18	11/16	17.46	11/16	17.46	18.3	17.5	24.9
GAA 08-08U	1/2	12.7	1/2	12.7	3/4-16	7/8	22.22	7/8	22.22	21.6	23.1	31.8

[Tube To SAE O-Ring Seal]

GSMC

SAE Male Connector

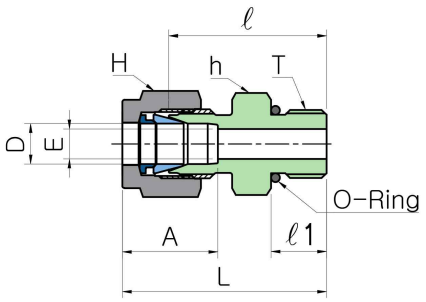

Connects Fractional(Inch) Tube to SAE Straight Thread Boss

Part No.	Tube O.D. D		Straight Thread T	Dimensions (mm)								
				E Min.	h		H		A	ℓ	ℓ1	L
	inch	mm			inch	mm	inch	mm				
GSMC 02-02U	1/8	3.17	5/16-24	2.3	7/16	11.11	7/16	11.11	12.7	23.3	7.6	30.0
GSMC 04-04U	1/4	6.35	7/16-20	4.8	9/16	14.28	9/16	14.28	15.2	26.7	9.1	34.0
GSMC 04-06U	1/4	6.35	9/16-18	4.8	11/16	17.46	9/16	14.28	15.2	28.2	9.9	35.6
GSMC 04-08U	1/4	6.35	3/4-16	4.8	7/8	22.22	9/16	14.28	15.2	30.2	11.2	37.6
GSMC 04-10U	1/4	6.35	7/8-14	4.8	1	25.40	9/16	14.28	15.2	33.3	12.7	40.6
GSMC 05-05U	5/16	7.93	1/2-20	6.4	5/8	15.87	5/8	15.87	16.3	27.4	9.1	34.8
GSMC 06-04U	3/8	9.52	7/16-20	4.6	5/8	15.87	11/16	17.46	16.8	28.2	9.1	35.6
GSMC 06-06U	3/8	9.52	9/16-18	7.1	11/16	17.46	11/16	17.46	16.8	29.7	9.9	37.1
GSMC 06-08U	3/8	9.52	3/4-16	7.1	7/8	22.22	11/16	17.46	16.8	31.8	11.2	39.1
GSMC 06-10U	3/8	9.52	7/8-14	7.1	1	25.40	11/16	17.46	16.8	34.8	12.7	42.2
GSMC 08-06U	1/2	12.70	9/16-18	7.1	13/16	20.63	7/8	22.22	22.9	29.0	9.9	39.1
GSMC 08-08U	1/2	12.70	3/4-16	10.4	7/8	22.22	7/8	22.22	22.9	31.8	11.2	41.9
GSMC 08-10U	1/2	12.70	7/8-14	10.4	1	25.40	7/8	22.22	22.9	34.8	12.7	45.0
GSMC 08-12U	1/2	12.70	1-1/16-12	10.4	1-1/4	31.75	7/8	22.22	22.9	38.9	15.0	49.0
GSMC 10-08U	5/8	15.87	3/4-16	10.7	15/16	23.81	1	25.40	24.4	31.8	11.2	41.9
GSMC 10-10U	5/8	15.87	7/8-14	12.7	1	25.40	1	25.40	24.4	35.1	12.7	45.2
GSMC 12-08U	3/4	19.05	3/4-16	10.7	1-1/16	26.98	1-1/8	28.57	24.4	35.8	11.2	46.0
GSMC 12-12U	3/4	19.05	1-1/16-12	15.7	1-1/4	31.75	1-1/8	28.57	24.4	38.9	15.0	49.0
GSMC 16-12U	1	25.40	1-1/16-12	16.8	1-3/8	34.92	1-1/2	38.10	31.2	41.1	15.0	53.3
GSMC 16-16U	1	25.40	1-5/16-12	22.4	1-1/2	38.10	1-1/2	38.10	31.2	42.2	15.0	54.4

GSME

Positionable SAE Male Elbow

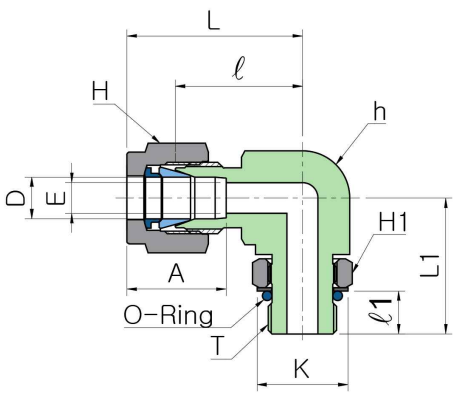

Connects Fractional(Inch) Tube to SAE Straight Thread Boss

Part No.	Tube O.D. D		Straight Thread T	Dimensions (mm)												
				E Min.	h		H		H1		A	ℓ	ℓ1	L	L1	K
	inch	mm			inch	mm	inch	mm	inch	mm						
GSME 04-04U	1/4	6.35	7/16-20	4.8	1/2	12.70	9/16	14.28	9/16	14.28	15.2	21.1	9.9	28.4	28.4	16.5
GSME 05-05U	5/16	7.93	1/2-20	5.8	9/16	14.28	5/8	15.87	5/8	15.87	16.3	22.9	9.9	30.2	39.5	18.3
GSME 06-06U	3/8	9.52	9/16-18	7.1	5/8	15.87	11/16	17.46	11/16	17.46	16.8	24.6	11.2	32.0	32.3	20.1
GSME 06-08U	3/8	9.52	3/4-16	7.1	13/16	20.63	11/16	17.46	7/8	22.22	16.8	27.4	12.7	34.8	37.8	25.7
GSME 08-08U	1/2	12.70	3/4-16	10.4	13/16	20.63	7/8	22.22	7/8	22.22	22.9	27.4	12.7	37.6	37.8	25.7
GSME 10-10U	5/8	15.87	7/8-14	12.7	1	25.40	1	25.40	1	25.40	24.4	29.5	14.2	39.6	43.4	29.5
GSME 12-12U	3/4	19.05	1-1/16-12	15.7	1-1/16	26.98	1-1/8	28.57	1-1/4	31.75	24.4	31.2	16.8	41.4	48.8	36.6
GSME 16-16U	1	25.40	1-5/16-12	22.4	1-3/8	34.92	1-1/2	38.10	1-1/2	38.10	31.2	38.4	16.8	50.5	53.6	43.9

[Tube To SAE O-Ring Seal]

GSME45D

Positionable 45˚ SAE Male Elbow

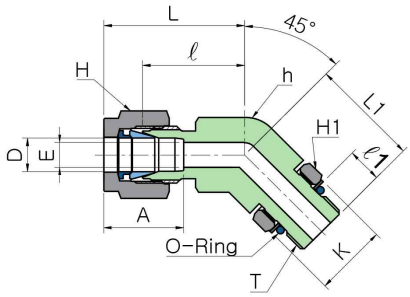

Connects Fractional(Inch) Tube to SAE Straight Thread Boss

Part No.	Tube O.D. D		Straight Thread T	Dimensions (mm)														O-Ring
				E	h		H		H1		A	ℓ	ℓ1	L	L1	K		
	inch	mm		Min.	inch	mm	inch	mm	inch	mm								
GSME45D 04-04U	1/4	6.35	7/16-20	4.8	1/2	12.70	9/16	14.28	9/16	14.28	15.2	18.3	9.9	25.7	25.7	16.5		-904
GSME45D 06-06U	3/8	9.52	9/16-18	7.1	5/8	15.87	11/16	17.46	11/16	17.46	16.8	20.6	11.2	27.9	28.2	20.1		-906
GSME45D 08-08U	1/2	12.70	3/4-16	10.4	13/16	20.63	7/8	22.22	7/8	22.22	22.9	21.8	12.7	32.0	32.3	25.7		-908
GSME45D 12-12U	3/4	19.05	1-1/16-12	15.7	1-1/16	26.98	1-1/8	28.57	1-1/4	31.75	24.4	29.7	16.8	39.9	47.2	36.6		-912
GSME45D 16-16U	1	25.40	1-5/16-12	22.4	1-3/8	34.92	1-1/2	38.10	1-1/2	38.10	31.2	35.3	16.8	47.5	50.5	43.9		-916

GSMRT

Positionable SAE Run Tee

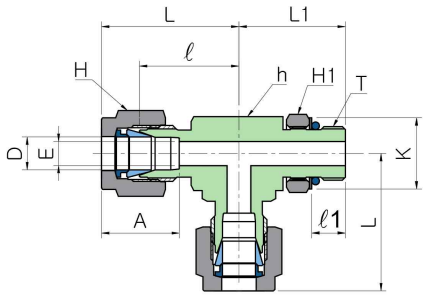

Connects Fractional(Inch) Tube to SAE Straight Thread Boss

Part No.	Tube O.D. D		Straight Thread T	Dimensions (mm)														O-Ring
				E	h		H		H1		A	ℓ	ℓ1	L	L1	K		
	inch	mm		Min.	inch	mm	inch	mm	inch	mm								
GSMRT 04-04U	1/4	6.35	7/16-20	4.8	1/2	12.7	9/16	14.28	9/16	14.28	15.2	21.1	9.9	28.4	28.4	16.5		-904
GSMRT 06-06U	3/8	9.52	9/16-18	7.1	5/8	15.87	11/16	17.46	11/16	17.46	16.8	24.6	11.2	32	32.3	20.1		-906
GSMRT 08-08U	1/2	12.7	3/4-16	10.4	13/16	20.63	7/8	22.22	7/8	22.22	22.9	27.4	12.7	37.6	37.8	25.7		-908
GSMRT 12-12U	3/4	19.05	1-1/16-12	15.7	1-1/16	26.98	1-1/8	28.57	1-1/4	31.75	24.4	31.2	16.8	41.4	48.8	36.6		-912
GSMRT 16-16U	1	25.4	1-5/16-12	22.4	1-3/8	34.92	1-1/2	38.1	1-1/2	38.1	31.2	38.4	16.8	50.5	53.6	43.9		-916

GSMBT

Positionable SAE Male Branch Tee

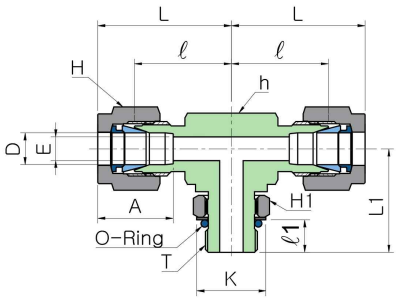

Connects Fractional(Inch) Tube to SAE Straight Thread Boss

Part No.	Tube O.D. D		Straight Thread T	Dimensions (mm)														O-Ring
				E	h		H		H1		A	ℓ	ℓ1	L	L1	K		
	inch	mm		Min.	inch	mm	inch	mm	inch	mm								
GSMBT 04-04U	1/4	6.35	7/16-20	4.8	1/2	12.70	9/16	14.28	9/16	14.28	15.2	21.1	9.9	28.4	28.4	16.5		-904
GSMBT 06-06U	3/8	9.52	9/16-18	7.1	5/8	15.87	11/16	17.46	11/16	17.46	16.8	24.6	11.2	32.0	32.3	20.1		-906
GSMBT 08-08U	1/2	12.70	3/4-16	10.4	13/16	20.63	7/8	22.22	7/8	22.22	22.9	27.4	12.7	37.6	37.8	25.7		-908
GSMBT 12-12U	3/4	19.05	1-1/16-12	15.7	1-1/16	26.98	1-1/8	28.57	1-1/4	31.75	24.4	31.2	16.8	41.4	48.8	36.6		-912
GSMBT 16-16U	1	25.40	1-5/16-12	22.4	1-3/8	34.92	1-1/2	38.10	1-1/2	38.10	31.2	38.4	16.8	50.5	53.6	43.9		-916

[Tube To SAE O-Ring Seal]

GMOS

Male O-Seal Straight Thread Connector

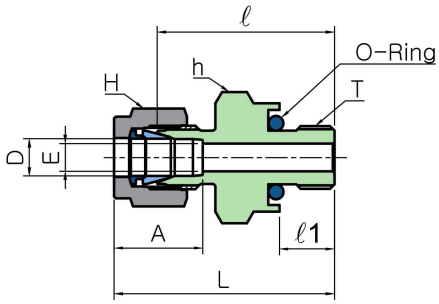

Connects Fractional(Inch) Tube to Female Straight Thread

Part No.	Tube O.D. D		Straight Thread T	Dimensions (mm)									O-Ring
				E Min.	h		H		A	ℓ	ℓ1	L	
	inch	mm			inch	mm	inch	mm					
GMOS 02-02U	1/8	3.17	5/16-24	2.3	9/16	14.28	7/16	11.11	12.7	26.2	8.6	32.8	-011
GMOS 03-03U	3/16	4.76	3/8-24	3.0	5/8	15.87	1/2	12.70	13.7	27.7	9.7	34.3	-012
GMOS 04-04U	1/4	6.35	7/16-20	4.8	3/4	19.05	9/16	14.28	15.2	31.0	10.4	38.4	-013
GMOS 05-05U	5/16	7.93	1/2-20	6.4	7/8	22.22	5/8	15.87	16.3	33.3	11.2	40.6	-112
GMOS 06-06U	3/8	9.52	9/16-18	7.1	15/16	23.81	11/16	17.46	16.8	35.1	11.9	42.4	-113
GMOS 08-08U	1/2	12.70	3/4-16	10.4	1-1/8	28.57	7/8	22.22	22.9	35.8	11.9	46.0	-116
GMOS 12-12U	3/4	19.05	1-1/16-12	15.7	1-1/2	38.10	1-1/8	28.57	24.4	42.2	14.2	52.3	-121
GMOS 16-16U	1	25.40	1-5/16-12	22.4	1-3/4	44.45	1-1/2	38.10	31.2	46.0	14.2	58.2	-125

GMOP

Male O-Seal Pipe Thread Connector

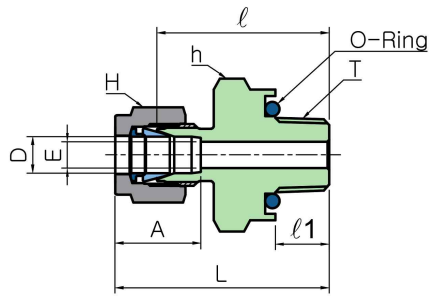

Connects Fractional(Inch) Tube to Female NPT Thread

Part No.	Tube O.D. D		T (NPT)	Dimensions (mm)									O-Ring
				E Min.	h		H		A	ℓ	ℓ1	L	
	inch	mm			inch	mm	inch	mm					
GMOP 02-02N	1/8	3.17	1/8	2.3	3/4	19.05	7/16	11.11	12.7	26.2	7.1	32.8	-013
GMOP 04-02N	1/4	6.35	1/8	4.8	3/4	19.05	9/16	14.28	15.2	27.7	7.1	35.1	-013
GMOP 04-04N	1/4	6.35	1/4	4.8	15/16	23.81	9/16	14.28	15.2	31.0	9.7	38.4	-113
GMOP 06-04N	3/8	9.52	1/4	7.1	15/16	23.81	11/16	17.46	16.8	32.5	9.7	39.9	-113
GMOP 06-06N	3/8	9.52	3/8	7.1	1-1/8	28.57	11/16	17.46	16.8	34.0	10.4	41.4	-116
GMOP 06-08N	3/8	9.52	1/2	7.1	1-5/16	33.33	11/16	17.46	16.8	39.6	13.5	47.0	-118
GMOP 08-08N	1/2	12.70	1/2	10.4	1-5/16	33.33	7/8	22.22	22.9	39.6	13.5	49.8	-118

[Tube To Weld Systems]

GMPWC

Male Pipe Weld Connector

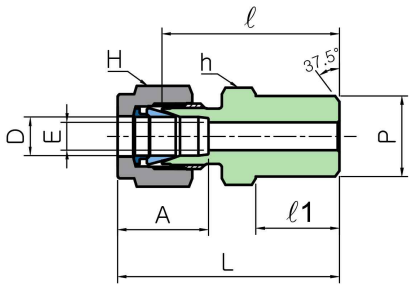

Connects Fractional(Inch) Tube to Pipe Butt Welded System

Part No.	Tube O.D. D		Welding Pipe Size P		Dimensions (mm)								
					E Min.	h		H		A	ℓ	ℓ1	L
	inch	mm	Nom	O.D.		inch	mm	inch	mm				
GMPWC 02-02P	1/8	3.17	1/8	10.30	2.3	7/16	11.11	7/16	11.11	12.7	23.9	9.7	30.5
GMPWC 03-02P	3/16	4.76	1/8	10.30	3.0	7/16	11.11	1/2	12.70	13.7	24.6	9.7	31.2
GMPWC 04-02P	1/4	6.35	1/8	10.30	4.8	1/2	12.70	9/16	14.28	15.2	25.4	9.7	32.8
GMPWC 04-04P	1/4	6.35	1/4	13.70	4.8	9/16	14.28	9/16	14.28	15.2	30.5	14.2	37.8
GMPWC 05-02P	5/16	7.93	1/8	10.30	5.3	9/16	14.28	5/8	15.87	16.3	26.7	9.7	34.0
GMPWC 05-04P	5/16	7.93	1/4	13.70	6.4	9/16	14.28	5/8	15.87	16.3	31.2	14.2	38.6
GMPWC 06-04P	3/8	9.52	1/4	13.70	7.1	5/8	15.87	11/16	17.46	16.8	32.5	14.2	39.9
GMPWC 06-06P	3/8	9.52	3/8	17.10	7.1	11/16	17.46	11/16	17.46	16.8	32.5	14.2	39.9
GMPWC 06-08P	3/8	9.52	1/2	21.30	7.1	7/8	22.22	11/16	17.46	16.8	38.9	19.1	46.2
GMPWC 08-06P	1/2	12.70	3/8	17.10	10.4	13/16	20.63	7/8	22.22	22.9	33.3	14.2	43.4
GMPWC 08-08P	1/2	12.70	1/2	21.30	10.4	7/8	22.22	7/8	22.22	22.9	38.9	19.1	49.0
GMPWC 08-12P	1/2	12.70	3/4	26.67	10.4	1-1/16	26.98	7/8	22.22	22.9	40.4	19.1	50.5
GMPWC 10-08P	5/8	15.87	1/2	21.30	12.7	15/16	23.81	1	25.40	24.4	38.9	19.1	49.0
GMPWC 12-12P	3/4	19.05	3/4	26.67	15.7	1-1/16	26.98	1-1/8	28.57	24.4	40.4	19.1	50.5
GMPWC 16-16P	1	25.40	1	33.40	22.4	1-3/8	34.92	1-1/2	38.10	31.2	50.0	23.9	62.2

Connects Metric Tube to Pipe Butt Welded System

Part No.	Tube O.D. D	Welding Pipe Size P		Dimensions (mm)						
				E Min.	h	H	A	ℓ	ℓ1	L
	mm	Nom	O.D.		mm	mm				
GMPWC 03M-02P	3	1/8	10.3	2.4	11.11	11.11	12.9	23.1	9.7	29.7
GMPWC 04M-02P	4	1/8	10.3	2.4	11.11	12.70	13.7	24.1	9.7	30.7
GMPWC 06M-02P	6	1/8	10.3	4.8	12.70	14.28	15.3	25.4	9.7	32.8
GMPWC 06M-04P	6	1/4	13.7	4.8	14.28	14.28	15.3	30.5	14.2	37.9
GMPWC 08M-02P	8	1/8	10.3	5.4	14.28	15.87	16.2	26.7	9.7	34.2
GMPWC 08M-04P	8	1/4	13.7	6.4	14.28	15.87	16.2	31.2	14.2	38.7
GMPWC 08M-08P	8	1/2	21.3	6.4	22.22	15.87	16.2	37.3	19.0	44.8
GMPWC 10M-04P	10	1/4	13.7	7.5	17.46	19.05	17.2	33.3	14.2	40.9
GMPWC 10M-06P	10	3/8	17.1	7.9	17.46	19.05	17.2	33.3	14.2	40.9
GMPWC 10M-08P	10	1/2	21.3	7.9	22.22	19.05	17.2	38.1	19.0	45.7
GMPWC 12M-04P	12	1/4	13.7	7.5	20.63	22.22	22.8	33.3	14.2	43.4
GMPWC 12M-06P	12	3/8	17.1	9.5	20.63	22.22	22.8	33.3	14.2	43.4
GMPWC 12M-08P	12	1/2	21.3	9.5	22.22	22.22	22.8	38.9	19.0	49.0
GMPWC 15M-08P	15	1/2	21.3	11.9	23.81	25.40	24.4	38.9	19.0	49.0
GMPWC 16M-08P	16	1/2	21.3	12.7	23.81	25.40	24.4	38.9	19.0	49.0
GMPWC 18M-08P	18	1/2	21.3	13.9	26.98	30.16	24.4	40.4	19.0	50.5

[Tube To Weld Systems]

GMPWE

Male Pipe Weld Elbow

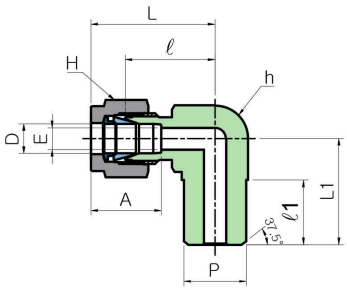

Connects Fractional(Inch) Tube to Pipe Butt Welded System

Part No.	Tube O.D. D		Welding Pipe Size P		Dimensions (mm)									
					E Min.	h		H		A	ℓ	ℓ1	L	L1
	inch	mm	Nom	O.D.		inch	mm	inch	mm					
GMPWE 02-02P	1/8	3.17	1/8	10.3	2.3	1/2	12.7	7/16	11.11	12.7	18.3	9.7	24.9	18.8
GMPWE 04-04P	1/4	6.35	1/8	13.7	4.8	1/2	12.7	9/16	14.28	15.2	19.6	13.8	26.9	23.4
GMPWE 06-04P	3/8	9.52	1/4	13.7	7.1	5/8	15.87	11/16	17.46	16.8	23.1	14	30.5	25.4
GMPWE 08-08P	1/2	12.7	1/2	21.3	10.4	13/16	20.63	7/8	22.22	22.9	25.9	19	36.1	33
GMPWE 12-12P	3/4	19.05	3/4	26.67	15.7	1-1/16	26.98	1-1/8	28.57	24.4	29.7	19	39.9	36.8

GTSWC

Tube Socket Weld Connector

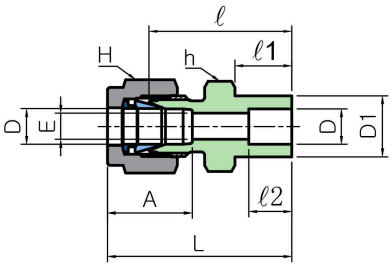

Connects Fractional(Inch) Tube to Tube Socket Welded System

Part No.	Tube O.D. D		Dimensions (mm)										
			E Min.	D1	h		H		A	ℓ	ℓ1	ℓ2	L
	inch	mm			inch	mm	inch	mm					
GTSWC 02-02T	1/8	3.17	2.3	7.9	7/16	11.11	7/16	11.11	12.7	22.4	8.6	6.4	29.0
GTSWC 04-04T	1/4	6.35	4.8	11.2	1/2	12.70	9/16	14.28	15.2	26.2	10.4	7.9	33.5
GTSWC 06-06T	3/8	9.52	7.1	15.7	5/8	15.87	11/16	17.46	16.8	30.2	11.9	9.7	37.6
GTSWC 08-08T	1/2	12.70	10.4	19.1	13/16	20.63	7/8	22.22	22.9	31.0	11.9	12.7	41.1
GTSWC 12-12T	3/4	19.05	15.7	26.7	1-1/16	26.98	1-1/8	28.57	24.4	33.3	11.9	14.2	43.4
GTSWC 16-16T	1	25.40	22.4	34.5	1-3/8	34.92	1-1/2	38.10	31.2	40.4	14.2	19.1	52.6

GTSWE

Tube Socket Weld Elbow

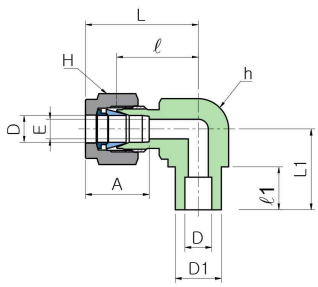

Connects Fractional(Inch) Tube to Tube Socket Welded System

Part No.	Tube O.D. D		Dimensions (mm)										
			E Min.	D1	h		H		A	ℓ	ℓ1	L	L1
	inch	mm			inch	mm	inch	mm					
GTSWE 04-04T	1/4	6.35	4.8	12.70	1/2	12.70	9/16	14.28	15.2	19.6	7.9	26.9	19.6
GTSWE 06-06T	3/8	9.52	7.1	15.74	5/8	15.87	11/16	17.46	16.8	23.1	9.7	30.5	23.1
GTSWE 08-08T	1/2	12.70	10.4	20.57	13/16	20.63	7/8	22.22	22.9	25.9	12.7	36.1	25.9
GTSWE 12-12T	3/4	19.05	15.7	26.92	1-1/16	26.98	1-1/8	28.57	24.4	29.71	14.22	39.87	29.71
GTSWE 16-16T	1	25.40	22.4	35.05	1-3/8	34.92	1-1/2	38.10	31.2	36.83	19.05	49.02	36.83

[Tube To Weld Systems]

GMPWA

Male Pipe Weld Adapter

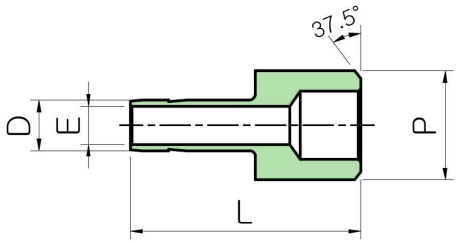

Connects Fractional(Inch) SG-LOK Port to Pipe Butt Welded System

Part No.	Tube O.D. D		Welding Pipe Size P		Dimensions (mm)	
	inch	mm	Nom	O.D.	E Min.	L
GMPWA 04T-04P	1/4	6.35	1/4	13.70	4.3	29.0
GMPWA 06T-08P	3/8	9.52	1/2	21.30	6.9	37.1
GMPWA 08T-08P	1/2	12.70	1/2	21.30	9.4	42.2
GMPWA 08T-12P	1/2	12.70	3/4	26.67	9.4	42.7
GMPWA 12T-12P	3/4	19.05	3/4	26.67	14.7	47.5

GTSWA

Tube Socket Weld Adapter

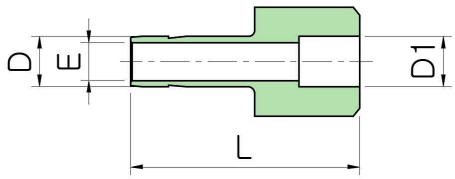

Connects Fractional(Inch) SG-LOK Port to Tube Socket Welded System

Part No.	Tube O.D. D		D1		Dimensions (mm)	
	inch	mm	Nom	O.D.	E Min.	L
GTSWA 04T-04T	1/4	6.35	1/4	6.35	4.3	29.0
GTSWA 06T-06T	3/8	9.52	3/8	9.52	6.9	37.1
GTSWA 08T-08T	1/2	12.70	1/2	12.70	9.4	42.2
GTSWA 12T-12T	3/4	19.05	3/4	19.05	14.7	47.5

[Plug and Cap]

GP
Tube Plug

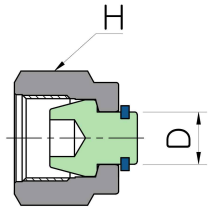

Connects Fractional(Inch) Tube

Part No.	Tube O.D. D		Dimensions (mm) H	
	inch	mm	inch	mm
GP 02	1/8	3.17	7/16	11.11
GP 03	3/16	4.76	1/2	12.70
GP 04	1/4	6.35	9/16	14.28
GP 05	5/16	7.93	5/8	15.87
GP 06	3/8	9.52	11/16	17.46
GP 08	1/2	12.70	7/8	22.22
GP 10	5/8	15.87	1	25.40
GP 12	3/4	19.05	1-1/8	28.57
GP 14	7/8	22.22	1-1/4	31.75
GP 16	1	25.40	1-1/2	38.10
GP 20	1-1/4	31.75	1-7/8	47.62
GP 24	1-1/2	38.10	2-1/4	57.15
GP 32	2	50.80	3	76.20

Connects Metric Tube

Part No.	Tube O.D. D (mm)	Dimensions (mm) H
GP 03M	3	11.11
GP 04M	4	12.70
GP 06M	6	14.28
GP 08M	8	15.87
GP 10M	10	19.05
GP 12M	12	22.22
GP 15M	15	25.40
GP 16M	16	25.40
GP 18M	18	30.16
GP 20M	20	31.75
GP 22M	22	31.75
GP 25M	25	38.10
GP 28M	28	47.63
GP 30M	30	50.80
GP 32M	32	50.80
GP 38M	38	57.15

GC
Tube Cap

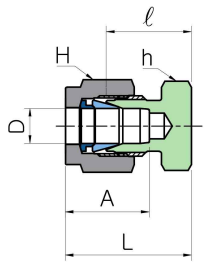

Connects Fractional(Inch) Tube

Part No.	Tube O.D. D		Dimensions (mm) h		H		A	ℓ	L
	inch	mm	inch	mm	inch	mm			
GC 02	1/8	3.17	7/16	11.11	7/16	11.11	12.7	13.5	20.1
GC 03	3/16	4.76	7/16	11.11	1/2	12.70	13.7	14.7	21.3
GC 04	1/4	6.35	1/2	12.70	9/16	14.28	15.2	16.0	23.3
GC 05	5/16	7.93	9/16	14.28	5/8	15.87	16.3	17.0	24.4
GC 06	3/8	9.52	5/8	15.87	11/16	17.46	16.8	18.3	25.7
GC 08	1/2	12.70	13/16	20.63	7/8	22.22	22.9	19.1	29.2
GC 10	5/8	15.87	15/16	23.81	1	25.40	24.4	19.8	30.0
GC 12	3/4	19.05	1-1/16	26.98	1-1/8	28.57	24.4	21.3	31.5
GC 14	7/8	22.22	1-3/16	30.16	1-1/4	31.75	25.9	23.9	34.0
GC 16	1	25.40	1-3/8	34.92	1-1/2	38.10	31.2	26.2	38.4
GC 20	1-1/4	31.75	1-3/4	44.45	1-7/8	47.62	41.1	31.2	53.3
GC 24	1-1/2	38.10	2-1/8	53.97	2-1/4	57.15	50.0	37.3	64.5
GC 32	2	50.80	2-3/4	69.85	3	76.20	67.6	49.3	86.6

Connects Metric Tube

Part No.	Tube O.D. D (mm)	Dimensions (mm) h	H	A	ℓ	L
GC 03	3	11.11	11.11	12.9	13.5	20.1
GC 04	4	11.11	12.70	13.7	14.7	21.3
GC 06	6	14.28	14.28	15.3	15.7	23.1
GC 08	8	15.87	15.87	16.2	17.0	24.5
GC 10	10	17.46	19.05	17.2	19.0	26.6
GC 12	12	22.22	22.22	22.8	19.0	29.1
GC 15	15	23.81	25.40	24.4	19.8	29.9
GC 16	16	23.81	25.40	24.4	19.8	29.9
GC 18	18	26.98	30.16	24.4	21.3	31.4
GC 20	20	30.16	31.75	26.0	23.9	34.0
GC 22	22	30.16	31.75	26.0	23.9	34.0
GC 25	25	34.92	38.10	31.3	26.2	38.5
GC 28	28	41.27	47.63	36.6	27.7	48.5
GC 30	30	47.63	50.80	39.6	31.8	53.4
GC 32	32	47.63	50.80	42.0	32.8	55.8
GC 38	38	55.56	57.15	49.4	37.8	65.4

[Components]

GI
Tube Insert

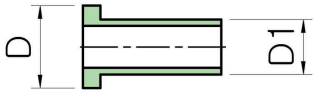

[Straight Type]

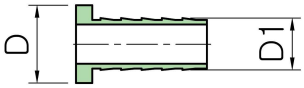

[Hook Type]

Connects Fractional(Inch) Tube

Part No.	Tube O.D. D		Tube O.D. D1	
	inch	mm	inch	mm
GI 03-02	3/16	4.76	1/8	3.17
GI 04-02	1/4	6.35	1/8	3.17
GI 04-03	1/4	6.35	3/16	4.76
GI 05-02	5/16	7.93	1/8	3.17
GI 05-03	5/16	7.93	3/16	4.76
GI 05-04	5/16	7.93	1/4	6.35
GI 06-03	3/8	9.52	3/16	4.76
GI 06-04	3/8	9.52	1/4	6.35
GI 08-04	1/2	12.70	1/4	6.35
GI 08-06	1/2	12.70	3/8	9.52
GI 10-06	5/8	15.87	3/8	9.52
GI 10-08	5/8	15.87	1/2	12.70
GI 12-08	3/4	19.05	1/2	12.70
GI 12-10	3/4	19.05	5/8	15.87
GI 16-12	1	25.40	3/4	19.05

Connects Metric Tube

Part No.	Tube O.D. D (mm)	Tube O.D. D1 (mm)
GI 06M-04M	6	4
GI 08M-06M	8	6
GI 10M-08M	10	8
GI 12M-08M	12	8
GI 12M-10M	12	10

GN
Nut

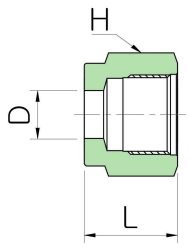

Connects Fractional(Inch) Tube

Part No.	Tube O.D. D		H		L (mm)
	inch	mm	inch	mm	
GN 02	1/8	3.17	7/16	11.11	11.9
GN 03	3/16	4.76	1/2	12.70	11.9
GN 04	1/4	6.35	9/16	14.28	12.7
GN 05	5/16	7.93	5/8	15.87	13.5
GN 06	3/8	9.52	11/16	17.46	14.2
GN 08	1/2	12.70	7/8	22.22	17.5
GN 10	5/8	15.87	1	25.40	17.5
GN 12	3/4	19.05	1-1/8	28.57	17.5
GN 14	7/8	22.22	1-1/4	31.75	17.5
GN 16	1	25.40	1-1/2	38.10	20.6
GN 20	1-1/4	31.75	1-7/8	47.63	31.7
GN 24	1-1/2	38.10	2-1/4	57.15	38.1
GN 32	2	50.80	3	76.20	52.3

Connects Metric Tube

Part No.	Tube O.D. D (mm)	H (mm)	L (mm)
GN 03M	3	11.11	11.9
GN 04M	4	12.70	11.9
GN 06M	6	14.28	12.7
GN 08M	8	15.87	13.5
GN 10M	10	19.05	15.1
GN 12M	12	22.22	17.5
GN 15M	15	25.40	17.5
GN 16M	16	25.40	17.5
GN 18M	18	30.16	17.5
GN 20M	20	31.75	17.5
GN 22M	22	31.75	17.5
GN 25M	25	38.10	20.6
GN 28M	28	47.63	30.6
GN 30M	30	50.80	32.7
GN 32M	32	50.80	34.4
GN 38M	38	57.15	40.6

[Components]

GFF
Front Ferrule

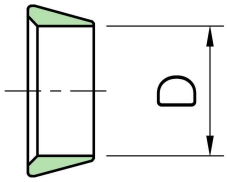

Connects Fractional(Inch) Tube

Part No.	Tube O.D. D	
	inch	mm
GFF 02	1/8	3.17
GFF 03	3/16	4.76
GFF 04	1/4	6.35
GFF 05	5/16	7.93
GFF 06	3/8	9.52
GFF 08	1/2	12.70
GFF 10	5/8	15.87
GFF 12	3/4	19.05
GFF 14	7/8	22.22
GFF 16	1	25.40
GFF 20	1-1/4	31.75
GFF 24	1-1/2	38.10
GFF 32	2	50.80

Connects Metric Tube

Part No.	Tube O.D. D (mm)
GFF 03M	3
GFF 04M	4
GFF 06M	6
GFF 08M	8
GFF 10M	10
GFF 12M	12
GFF 15M	15
GFF 16M	16
GFF 18M	18
GFF 20M	20
GFF 22M	22
GFF 25M	25
GFF 28M	28
GFF 30M	30
GFF 32M	32
GFF 38M	38

GBF
Back Ferrule

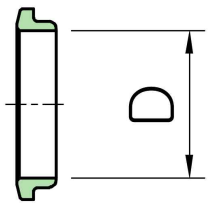

Connects Fractional(Inch) Tube

Part No.	Tube O.D. D	
	inch	mm
GBF 02	1/8	3.17
GBF 03	3/16	4.76
GBF 04	1/4	6.35
GBF 05	5/16	7.93
GBF 06	3/8	9.52
GBF 08	1/2	12.70
GBF 10	5/8	15.87
GBF 12	3/4	19.05
GBF 14	7/8	22.22
GBF 16	1	25.40
GBF 20	1-1/4	31.75
GBF 24	1-1/2	38.10
GBF 32	2	50.80

Connects Metric Tube

Part No.	Tube O.D. D (mm)
GBF 03M	3
GBF 04M	4
GBF 06M	6
GBF 08M	8
GBF 10M	10
GBF 12M	12
GBF 15M	15
GBF 16M	16
GBF 18M	18
GBF 20M	20
GBF 22M	22
GBF 25M	25
GBF 28M	28
GBF 30M	30
GBF 32M	32
GBF 38M	38